Fisher™ ET and EAT easy-e™ Valves CL125 through CL600

Contents

Introduction 1
Scope of Manual 1
Description 2
Specifications 3
Educational Services 3
Installation 3
Maintenance 4
Packing Lubrication 5
Packing Maintenance 5
Replacing Packing 6
Trim Maintenance 11
Disassembly 11
Lapping Metal Seats 12
Valve Plug Maintenance 13
Assembly 15
ENVIRO-SEAL™ Bellows Seal Bonnet 16
Replacing a Plain or Extension Bonnet with an ENVIRO-SEAL Bellows Seal Bonnet (Stem/Bellows Assembly) 16
Replacement of an Installed ENVIRO-SEAL Bellows Seal Bonnet (Stem/Bellows Assembly) 19
Purging the ENVIRO-SEAL Bellows Seal Bonnet . 20
Parts Ordering 21
Parts Kits 21
Parts List 26

Figure 1. Fisher ET Control Valve with 667 Actuator

W1916-3

Introduction

Scope of Manual

This instruction manual includes installation, maintenance, and parts information for NPS 1 through 8 Fisher ET valves, and NPS 1 through 6 EAT valves, through CL600 ratings. Refer to separate manuals for instructions covering the actuator and accessories.

Do not install, operate, or maintain ET valves without being fully trained and qualified in valve, actuator, and accessory installation, operation, and maintenance. **To avoid personal injury or property damage, it is important to carefully read, understand, and follow all the contents of this manual, including all safety cautions and warnings.** If you have any questions about these instructions, contact your Emerson sales office or Local Business Partner before proceeding.

Table 1. Specifications

End Connection Styles

Cast Iron Valves
Flanged: CL125 flat-face or 250 raised-face flanges per ASME B16.1
Steel and Stainless Steel Valves
Flanged: CL150, 300, and 600 raised-face or ring-type joint flanges per ASME B16.5
Screwed or Socket Welding: All available ASME B16.11 schedules that are consistent with CL600 per ASME B16.34
Buttwelding: Consistent with ASME B16.25

Maximum Inlet Pressure(1)

Cast Iron Valves
Flanged: Consistent with CL125B or 250B pressure-temperature ratings per ASME B16.1
Steel and Stainless Steel Valves
Flanged: Consistent with CL150, 300, and 600(2) pressure-temperature ratings per ASME B16.34
Screwed or Welding: Consistent with CL600 pressure-temperature ratings per ASME B16.34

Shutoff Classifications

See table 2

Flow Characteristics

Linear (all cages), quick-opening (all except Whisper Trim™, WhisperFlo™, and Cavitrol™ cages), or equal percentage (all except Whisper Trim, WhisperFlo, and Cavitrol cages)

Flow Directions

Linear, Quick Opening, or Equal Percentage Cage: Normally down
Whisper Trim and WhisperFlo Cages: Always up
Cavitrol Cage: Always down

Approximate Weights

VALVE SIZE, NPS	WEIGHT	
	kg	Pounds
1 and 1-1/4	14	30
1-1/2	20	45
2	39	67
2-1/2	45	100
3	54	125
4	77	170
6	159	350
8	408	900

1. The pressure/temperature limits in this manual and any applicable standard or code limitation for valve should not be exceeded.
2. Certain bonnet bolting material selections may require a CL600 easy-e valve assembly to be derated. Contact your Emerson sales office or Local Business Partner.

Table 2. Available Shutoff Classifications per ANSI/FCI 70-2 and IEC 60534-4

Valve	Seating	Shutoff Class
All except those with Cavitrol III cages	PTFE (standard)	V - air test
		V - water test (optional)
	Metal	IV
		V (optional)(2)
ET with Cavitrol III one-stage cage	Metal	IV (standard)
		V (optional)
ET with Cavitrol III two-stage cages	Metal	V
ET w/PEEK Anti-Extrusion Rings	Metal	V to 316°C (600°F)
ET w/ 3.4375 to 7-inch port	Soft or Metal	VI
ET and EAT w/ TSO (Tight Shutoff Trim)	Replaceable, protected soft seat	TSO(1)

1. This is a special non-ANSI/FCI leakage class.
2. Class V shutoff requires spring-loaded seal ring, radiused-seat plug, and wide-bevel seat ring (not available with 8-inch port, quick-opening cage). Not available with trims 4, 29, and 85.

Description

These single-port valves have cage guiding, quick-change trim, and balanced push-down-to-close valve plug action. Valve configurations are as follows:

ET--Globe-style valve (figure 1) with metal-to-PTFE seating (standard for all except Cavitrol III cages) for stringent shutoff requirements, or metal-to-metal seating (standard for Cavitrol III cages, optional for all others) for higher temperatures.

EAT--Angle version of ET, used to facilitate piping or in applications which require a self-draining valve.

Specifications

Typical specifications for these valves are shown in table 1.

Educational Services

For information on available courses for Fisher ET and ETA valves, as well as a variety of other products, contact:

Emerson Automation Solutions
Educational Services - Registration
Phone: 1-641-754-3771 or 1-800-338-8158
E-mail: education@emerson.com
emerson.com/fishervalvetraining

Installation

⚠ WARNING

Always wear protective gloves, clothing, and eyewear when performing any installation operations to avoid personal injury.

Personal injury or equipment damage caused by sudden release of pressure may result if the valve assembly is installed where service conditions could exceed the limits given in table 1 or on the appropriate nameplates. To avoid such injury or damage, provide a relief valve for over-pressure protection as required by government or accepted industry codes and good engineering practices.

Check with your process or safety engineer for any additional measures that must be taken to protect against process media.

If installing into an existing application, also refer to the WARNING at the beginning of the Maintenance section in this instruction manual.

CAUTION

When ordered, the valve configuration and construction materials were selected to meet particular pressure, temperature, pressure drop, and controlled fluid conditions. Responsibility for the safety of process media and compatibility of valve materials with process media rests solely with the purchaser and end-user. Since some valve body/trim material combinations are limited in their pressure drop and temperature ranges, do not apply any other conditions to the valve without first contacting your Emerson sales office or Local Business Partner.

Before installing the valve, inspect the valve and pipelines for any damage and any foreign material which may cause product damage.

1. Before installing the valve, inspect the valve and associated equipment for any damage and any foreign material.
2. Make certain the valve body interior is clean, that pipelines are free of foreign material, and that the valve is oriented so that pipeline flow is in the same direction as the arrow on the side of the valve.

3. The control valve assembly may be installed in any orientation unless limited by seismic criteria. However, the normal method is with the actuator vertical above the valve. Other positions may result in uneven valve plug and cage wear, and improper operation. With some valves, the actuator may also need to be supported when it is not vertical. For more information, consult your Emerson sales office or Local Business Partner.
4. Use accepted piping and welding practices when installing the valve in the line. For flanged valves, use a suitable gasket between the valve and pipeline flanges.

CAUTION

Depending on valve body materials used, post weld heat treating may be required. If so, damage to internal elastomeric and plastic parts, as well as internal metal parts is possible. Shrink-fit pieces and threaded connections may also loosen. In general, if post weld heat treating is to be performed, all trim parts should be removed. Contact your Emerson sales office or Local Business Partner for additional information.

5. With a leak-off bonnet construction, remove the pipe plugs (keys 14 and 16, figure 14) to hook up the leak-off piping. If continuous operation is required during inspection or maintenance, install a three-valve bypass around the control valve assembly.
6. If the actuator and valve are shipped separately, refer to the actuator mounting procedure in the appropriate actuator instruction manual.

⚠ WARNING

Personal injury could result from packing leakage. Valve packing was tightened prior to shipment; however, the packing might require some readjustment to meet specific service conditions. Check with your process or safety engineer for any additional measures that must be taken to protect against process media.

Valves with ENVIRO-SEAL live-loaded packing or HIGH-SEAL live-loaded packing will not require this initial readjustment. See the Fisher instruction manuals, ENVIRO-SEAL Packing System for Sliding-Stem Valves or HIGH-SEAL Live-Loaded Packing System (as appropriate), for packing instructions. If you wish to convert your present packing arrangement to ENVIRO-SEAL packing, refer to the retrofit kits listed in the Parts Kits section.

Maintenance

Valve parts are subject to normal wear and must be inspected and replaced as necessary. Inspection and maintenance frequency depends on the severity of service conditions. This section includes instructions for packing lubrication, packing maintenance, trim maintenance, and ENVIRO-SEAL bellows seal bonnet replacement. All maintenance operations may be performed with the valve in the line.

⚠ WARNING

Avoid personal injury or property damage from sudden release of process pressure or bursting of parts. Before performing any maintenance operations:

- **Do not remove the actuator from the valve while the valve is still pressurized.**
- **Always wear protective gloves, clothing, and eyewear when performing any maintenance operations to avoid personal injury.**
- **Disconnect any operating lines providing air pressure, electric power, or a control signal to the actuator. Be sure the actuator cannot suddenly open or close the valve.**

- **Use bypass valves or completely shut off the process to isolate the valve from process pressure. Relieve process pressure from both sides of the valve. Drain the process media from both sides of the valve.**
- **Vent the pneumatic actuator loading pressure and relieve any actuator spring precompression.**
- **Use lock-out procedures to be sure that the above measures stay in effect while you work on the equipment.**
- **The valve packing box may contain process fluids that are pressurized, *even when the valve has been removed from the pipeline.* Process fluids may spray out under pressure when removing the packing hardware or packing rings, or when loosening the packing box pipe plug.**
- **Check with your process or safety engineer for any additional measures that must be taken to protect against process media.**

CAUTION

Follow instructions carefully to avoid damaging the product surfaces, which could result in damage to the product.

Note

Whenever a gasket seal is disturbed by removing or shifting gasketed parts, install a new gasket during reassembly. This ensures a good gasket seal because the used gasket may not seal properly.

Packing Lubrication

Note

ENVIRO-SEAL and HIGH-SEAL packing do not require lubrication.

⚠ WARNING

To avoid personal injury or property damage resulting from fire or explosion, do not lubricate packing used in oxygen service or in processes with temperatures over 260°C (500°F).

If a lubricator or lubricator/isolating valve (figure 2) is provided for PTFE/composition or other packings that require lubrication, it will be installed in place of the pipe plug (key 14, figure 14). Use a good quality silicon-base lubricant. Do not lubricate packing used in oxygen service or in processes with temperatures over 260°C (500°F). To operate the lubricator, simply turn the cap screw clockwise to force the lubricant into the packing box. The lubricator/isolating valve operates the same way except open the isolating valve before turning the cap screw and then close the isolating valve after lubrication is completed.

Packing Maintenance

Note

For valves with ENVIRO-SEAL packing, see the Fisher instruction manual, ENVIRO-SEAL Packing System for Sliding-Stem Valves, D101642X012, for packing instructions.

For valves with HIGH-SEAL packing, see the Fisher instruction manual, HIGH-SEAL Live-Loaded Packing System, D101453X012, for packing instructions.

Key numbers refer to figure 3 for PTFE V-ring packing and to figure 4 for PTFE/composition packing, unless otherwise indicated.

For spring-loaded single PTFE V-ring packing, the spring (key 8) maintains a sealing force on the packing. If leakage is noted around the packing follower (key 13), check to be sure the shoulder on the packing follower is touching the bonnet. If the shoulder is not touching the bonnet, tighten the packing flange nuts (key 5, figure 14) until the shoulder is against the bonnet. If leakage cannot be stopped in this manner, proceed to the Replacing Packing procedure.

Figure 2. Lubricator and Lubricator/Isolating Valve (Optional)

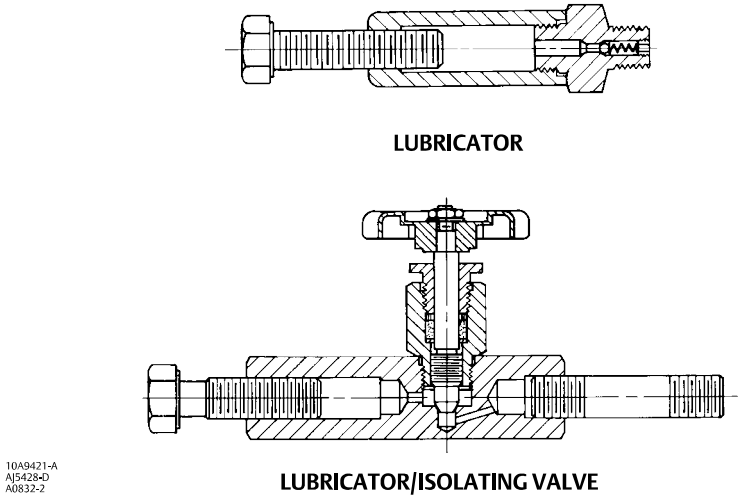

If there is undesirable packing leakage with other than spring-loaded packing, first try to limit the leakage and establish a stem seal by tightening the packing flange nuts.

If the packing is relatively new and tight on the stem, and if tightening the packing flange nuts does not stop the leakage, the valve stem may be worn or nicked so that a seal cannot be made. The surface finish of a new valve stem is critical for making a good packing seal. If the leakage comes from the outside diameter of the packing, the leakage may be caused by nicks or scratches around the packing box wall. If performing any of the following procedures, inspect the valve stem and packing box wall for nicks and scratches.

Replacing Packing

⚠ WARNING

Refer to the WARNING at the beginning of the Maintenance section in this instruction manual.

1. Isolate the control valve from the line pressure, release pressure from both sides of the valve, and drain the process media from both sides of the valve. If using a power actuator, also shut off all pressure lines to the power actuator, and release all pressure from the actuator. Use lock-out procedures to be sure that the above measures stay in effect while you work on the equipment.
2. Disconnect the operating lines from the actuator and any leak-off piping from the bonnet. Disconnect the stem connector, then remove the actuator from the valve by unscrewing the yoke locknut (key 15, figure 14) or the hex nuts (key 26, figure 14).

3. Loosen the packing flange nuts (key 5, figure 14) so that the packing is not tight on the valve stem. Remove any travel indicator parts and stem locknuts from the valve stem threads.

⚠ WARNING

To avoid personal injury or property damage caused by uncontrolled movement of the bonnet, loosen the bonnet by following the instructions in the next step. Do not remove a stuck bonnet by pulling on it with equipment that can stretch or store energy in any other manner. The sudden release of stored energy can cause uncontrolled movement of the bonnet.

Figure 3. PTFE V-Ring Packing Arrangements for Plain and Extension Bonnets

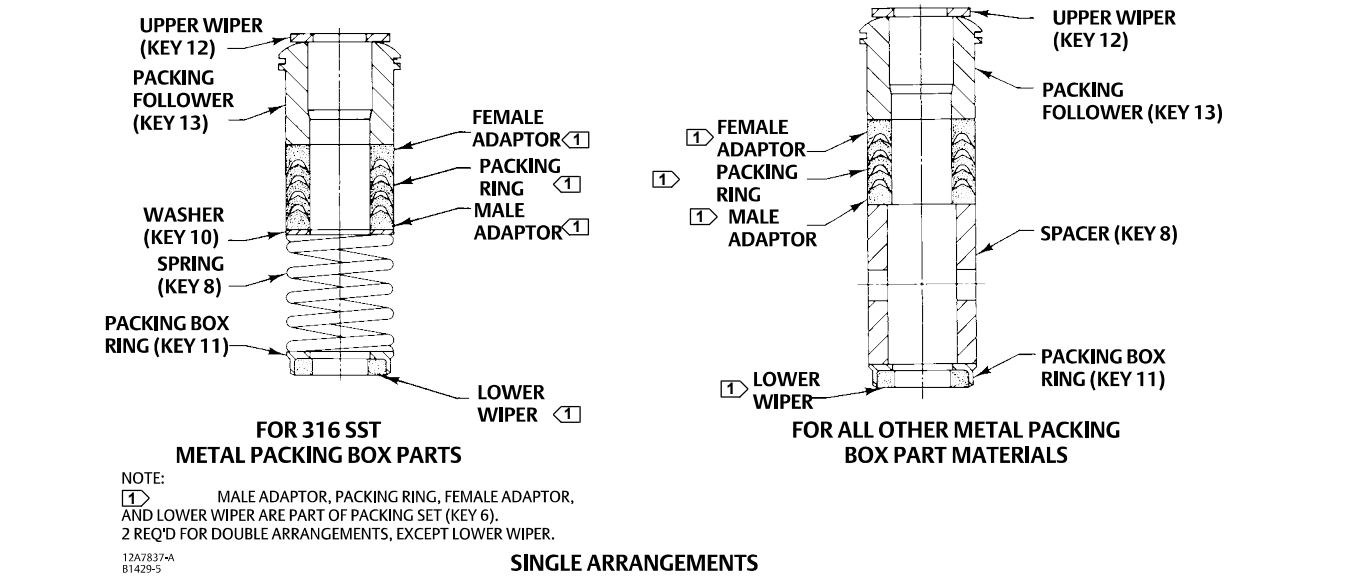

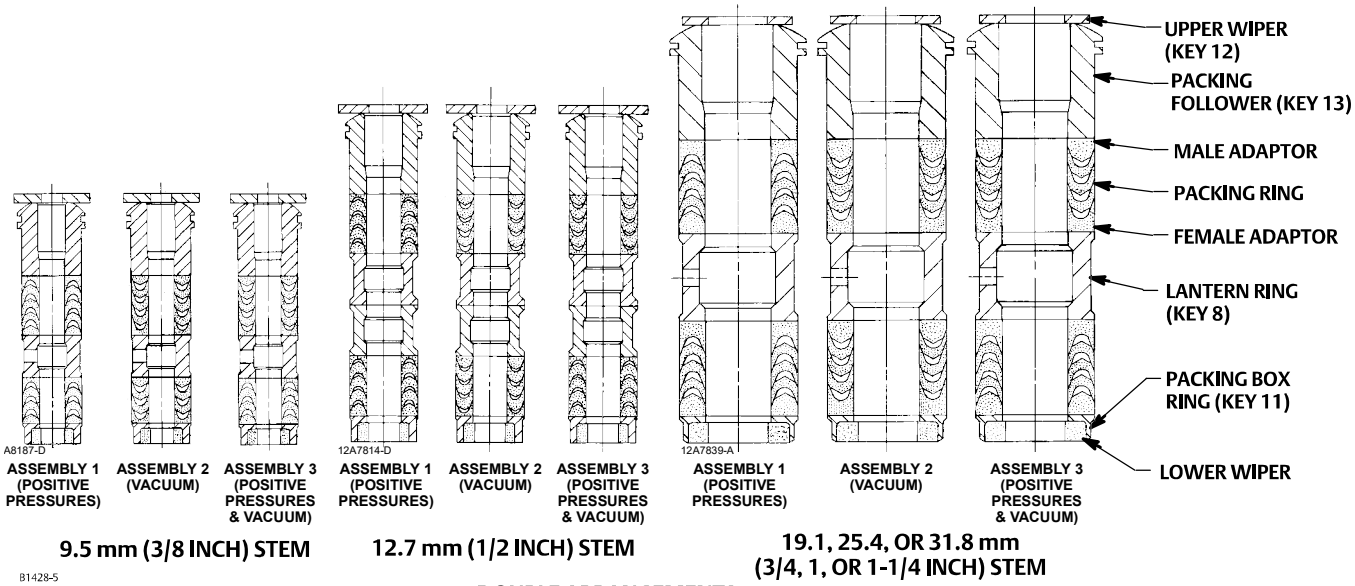

Figure 4. Detail of PTFE/Composition Packing Arrangements for Plain and Extension Bonnets

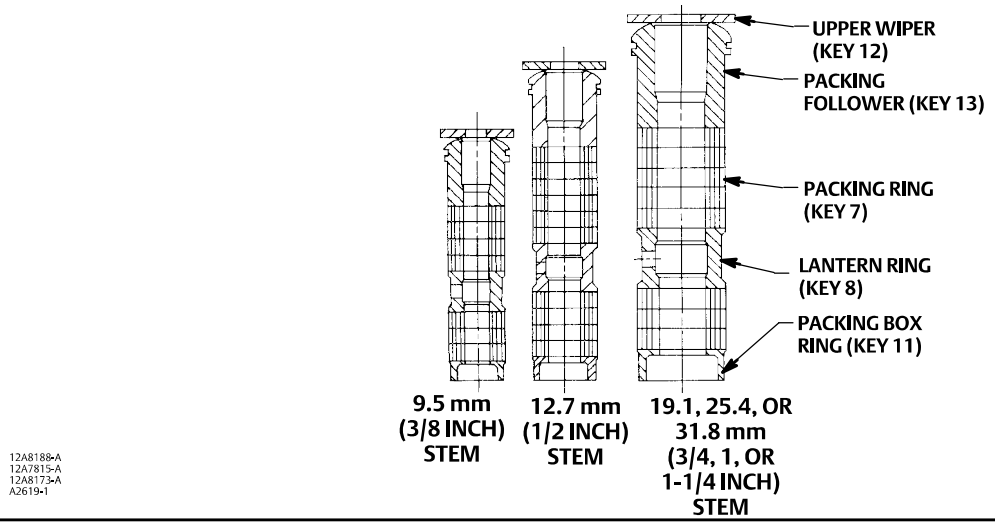

Table 3. Body-to-Bonnet Bolt Torque Guidelines

VALVE SIZE, NPS		BOLT TORQUES(1)			
ET	EAT	SA193-B7, SA193-B8M(3, 4)		SA193-B8M(2, 4)	
		N•m	Lbf•ft	N•m	Lbf•ft
1-1/4 or less	1	129	95	64	47
1-1/2, 1-1/2 x 1, 2, or 2 x 1	2 or 2 x 1	96	71	45	33
2-1/2 or 2-1/2 x 1-1/2	3 or 3 x 1-1/2	129	95	64	47
3, 3 x 2, or 3 x 2-1/2	4 or 4 x 2	169	125	88	65
4, 4 x 2-1/2, or 4 x 3	6 or 6 x 2-1/2	271	200	156	115
6	– – –	549	405	366	270
8	– – –	746	550	529	390

1. Determined from laboratory tests.
2. SA193-B8M annealed.
3. SA193-B8M strain hardened.
4. For other materials, contact your Emerson sales office or Local Business Partner.

Note

The following step also helps to provide additional assurance that the valve body fluid pressure has been relieved.

CAUTION

Avoid damaging the seating surface caused by the valve plug and stem assembly dropping from the bonnet (key 1, figure 14) after being lifted part way out. When lifting the bonnet, temporarily install a valve stem locknut on the valve stem. The locknut will prevent the valve plug and stem assembly from dropping out of the bonnet.

4. Hex nuts (key 16, figure 16, 17, or 20) or cap screws (not shown) attach the bonnet (key 1, figure 14) to the valve body (key 1, figure 16, 17, or 20). Loosen these nuts or cap screws approximately 3 mm (1/8 inch). Then loosen the body-to-bonnet gasketed joint by either rocking the bonnet or prying between the bonnet and valve. Work the

prying tool around the bonnet until the bonnet loosens. If no fluid leaks from the joint, remove the nuts or cap screws completely and carefully lift the bonnet off the valve.

Table 4. Recommended Torque for Packing Flange Nuts

VALVE STEM DIAMETER		PRESSURE RATING	GRAPHITE TYPE PACKING				PTFE TYPE PACKING			
			Minimum Torque		Maximum Torque		Minimum Torque		Maximum Torque	
mm	Inches		N•m	Lbf•in	N•m	Lbf•in	N•m	Lbf•in	N•m	Lbf•in
9.5	3/8	CL125, 150	3	27	5	40	1	13	2	19
		CL250, 300	4	36	6	53	2	17	3	26
		CL600	6	49	8	73	3	23	4	35
12.7	1/2	CL125, 150	5	44	8	66	2	21	4	31
		CL250, 300	7	59	10	88	3	28	5	42
		CL600	9	81	14	122	4	39	7	58
19.1	3/4	CL125, 150	11	99	17	149	5	47	8	70
		CL250, 300	15	133	23	199	7	64	11	95
		CL600	21	182	31	274	10	87	15	131
25.4	1	CL300	26	226	38	339	12	108	18	162
		CL600	35	310	53	466	17	149	25	223
31.8	1-1/4	CL300	36	318	54	477	17	152	26	228
		CL600	49	437	74	655	24	209	36	314

5. Remove the locknut and separate the valve plug and stem from the bonnet. Set the parts on a protective surface to prevent damage to gasket or seating surfaces.

CAUTION

To prevent possible product damage, cover the opening in the valve in the following procedure to prevent foreign material from getting into the valve body cavity.

6. Remove the bonnet gasket (key 10, figure 16, 17, or 20) and cover the opening in the valve to protect the gasket surface and prevent foreign material from getting into the valve body cavity.
7. Remove the packing flange nuts, packing flange, upper wiper, and packing follower (keys 5, 3, 12, and 13, figure 14). Carefully push out all the remaining packing parts from the valve side of the bonnet using a rounded rod or other tool that will not scratch the packing box wall. Clean the packing box and the metal packing parts.
8. Inspect the valve stem threads and packing box surfaces for any sharp edges which might cut the packing. Scratches or burrs could cause packing box leakage or damage to the new packing. If the surface condition cannot be improved by light sanding, replace the damaged parts by following the appropriate steps in the Trim Maintenance procedure.
9. Remove the covering protecting the valve body cavity and install a new bonnet gasket (key 10, figure 16, 17, or 20), making sure the gasket seating surfaces are clean and smooth. Then slide the bonnet over the stem and onto the stud bolts (key 15, figure 16, 17, or 20) or onto the valve body cavity if cap screws (not shown) will be used instead.

Note

Proper performance of the bolting procedures in step 10 compresses the spiral wound gasket (key 12, figure 16 or 17) or load ring (key 26, figure 20) enough to both load and seal the seat ring gasket (key 13, figure 16, 17 or 20). It also compresses the outer edge of the bonnet gasket (key 10, figure 16 through 20) enough to seal the body-to-bonnet joint.

The proper bolting procedures in step 10 include--but are not limited to--ensuring that bolting threads are clean, and evenly tightening the cap screws, or the nuts onto the studs, in a crisscross pattern. Tightening one cap screw or nut may loosen an adjacent cap screw or nut. Repeat the crisscross tightening pattern several times until each cap screw or nut is tight and the body-to-bonnet seal is made. When the operating temperature has been reached, perform this torquing procedure once again.

Figure 5. Detail of Graphite Ribbon/Filament Packing for Plain and Extension Bonnets

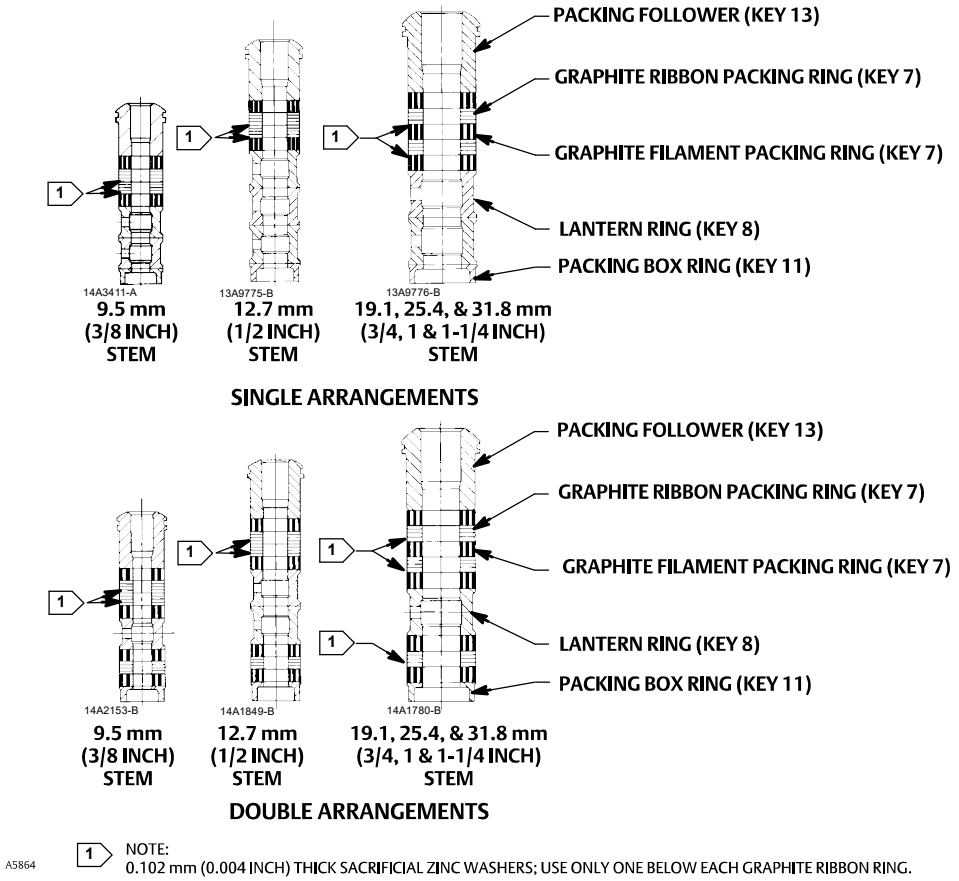

Note

Stud(s) and nut(s) should be installed such that the manufacturer's trademark and material grade marking is visible, allowing easy comparison to the materials selected and documented in the Emerson/Fisher serial card provided with this product.

⚠ WARNING

Personal injury or damage to equipment could occur if improper stud and nut materials or parts are used. Do not operate or assemble this product with stud(s) and nut(s) that are not approved by Emerson/Fisher engineering and/or listed on the serial card provided with this product. Use of unapproved materials and parts could lead to stresses exceeding the design or code limits intended for this particular service. Install studs with the material grade and manufacturer's identification mark visible. Contact your Emerson representative immediately if a discrepancy between actual parts and approved parts is suspected.

10. Lubricate the bolting (not necessary if factory pre-lubricated stud bolt nuts are used) and install it, using accepted bolting procedures during tightening, so that the body-to-bonnet joint will withstand test pressures and application service conditions. Use the bolt torques in table 3 as guidelines.
11. Install new packing and the metal packing box parts according to the appropriate arrangement in figure 3, 4, or 5. Place a smooth-edged pipe over the valve stem and gently tap each soft packing part into the packing box.

12. Slide the packing follower, upper wiper, and packing flange (keys 13, 12, and 3, figure 14) into position. Lubricate the packing flange studs (key 4, figure 14) and the faces of the packing flange nuts (key 5, figure 14). Install the packing flange nuts.
13. **For spring-loaded PTFE V-ring packing,** tighten the packing flange nuts until the shoulder on the packing follower (key 13, figure 14) contacts the bonnet.

For graphite packing, tighten the packing flange nuts to the maximum recommended torque shown in table 4. Then, loosen the packing flange nuts, and retighten them to the recommended minimum torque shown in table 4.

For other packing types, tighten the packing flange nuts alternately in small equal increments until one of the nuts reaches the minimum recommended torque shown in table 4. Then, tighten the remaining flange nut until the packing flange is level and at a 90-degree angle to the valve stem.

For ENVIRO-SEAL or HIGH-SEAL live-loaded packing, refer to the note at the beginning of Packing Maintenance.

14. Mount the actuator on the valve assembly and reconnect the actuator and valve stem according to the procedure in the appropriate actuator instruction manual.

Figure 6. TSO (Tight Shutoff Trim), Detail of Protected Soft Seat

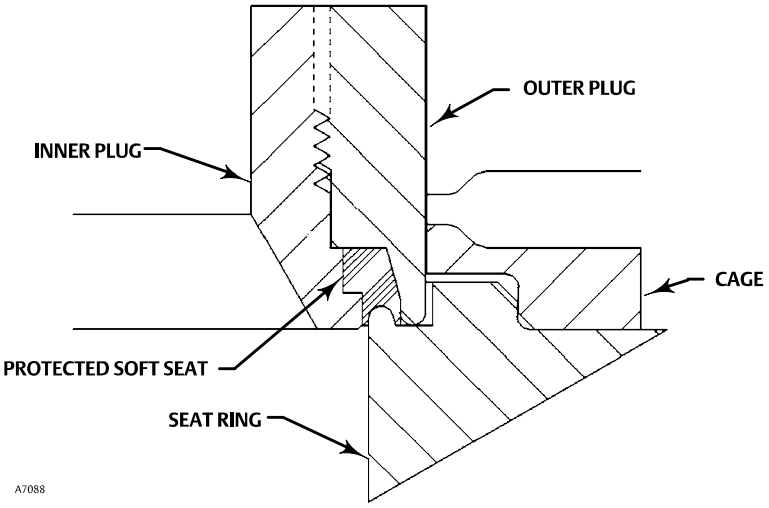

Trim Maintenance

⚠ WARNING

Refer to the WARNING at the beginning of the Maintenance section in this instruction manual.

Except where indicated, key numbers in this section are referenced in figure 16 for standard NPS 1 through 6 constructions, figure 17 for Whisper Trim III detail, figures 18 and 19 for WhisperFlo trim, and figure 20 for Cavitrol III detail and the NPS 8 ET valve.

Disassembly

1. Remove the actuator and the bonnet according to steps 1 through 6 of the Replacing Packing procedure in the Maintenance section.

⚠ WARNING

To avoid personal injury due to leaking fluid, avoid damaging gasket sealing surfaces. The surface finish of the valve stem (key 7) is critical for making a good packing seal. The inside surface of the cage or cage/baffle assembly (key 3), or cage retainer (key 31), is critical for smooth operation of the valve plug. The seating surfaces of the valve plug (key 2) and seat ring (key 9) are critical for proper shutoff. Unless inspection reveals otherwise, assume all these parts are in good condition and protect them accordingly.

2. Remove the packing flange nuts, packing flange, upper wiper, and packing follower (keys 5, 3, 12, and 13 in figure 14). Carefully push out all the remaining packing parts from the valve side of the bonnet using a rounded rod or other tool that will not scratch the packing box wall. Clean the packing box and the metal packing parts.
3. Inspect the valve stem threads and packing box surfaces for any sharp edges which might cut the packing. Scratches or burrs could cause packing box leakage or damage to the new packing. If the surface condition cannot be improved by light sanding, replace the damaged parts.
4. Remove the load ring (key 26) from an NPS 8 ET valve, or the cage adaptor (key 4) from any restricted-trim valve through NPS 4, and wrap it for protection.
5. On an NPS 6 ET valve with Whisper Trim III or WhisperFlo cage, also remove the bonnet spacer (key 32) and bonnet gasket (key 10) on top of the spacer. Then on any construction with a cage retainer (key 31), remove the cage retainer and its associated gaskets. A Whisper Trim III and WhisperFlo cage retainer has two 3/8-inch-16 UNC tappings in which screws or bolts can be installed for lifting.
6. Remove the cage or cage/baffle assembly (key 3), the associated gaskets (keys 10, 11, and 12), and shim (key 51). If the cage is stuck in the valve, use a rubber mallet to strike the exposed portion of the cage at several points around its circumference.
7. For constructions other than TSO (tight shutoff) trim, remove the seat ring or liner (key 9) or disk seat (key 22), seat ring gasket (key 13), and the seat ring adaptor (key 5) and adaptor gasket (key 14) where used in a restricted-trim seat ring construction. PTFE-seat constructions use a disk (key 23) sandwiched between the disk seat and disk retainer (key 21).
8. For TSO (tight shutoff) trim constructions, perform the following steps (refer to figures 6 and 7):
   a. Remove the retainer, backup ring, anti-extrusion rings, and piston ring.
   b. Remove the set screws that lock the outer plug to the inner plug.
   c. Using a strap wrench or similar tool, unscrew the outer plug from the inner plug. Do not damage the outer plug guide surfaces.
   d. Remove the protected soft seat seal.
   e. Inspect the parts for damage and replace if needed.
9. For all constructions, inspect parts for wear or damage which would prevent proper operation of the valve. Replace or repair trim parts according to the following procedure for Lapping Metal Seats or other valve plug maintenance procedures as appropriate.

Lapping Metal Seats

CAUTION

To avoid damaging the ENVIRO-SEAL Bellows Seal Bonnet assembly, do not attempt to lap the metal seating surfaces. The design of the assembly prevents rotation of the stem and any forced lapping rotation will damage internal components of the ENVIRO-SEAL Bellows Seal bonnet.

Except with respect to the ENVIRO-SEAL Bellows Seal Bonnet assembly, with metal-seat constructions, lapping seating surfaces of the valve plug and seat ring or liner (keys 2 and 9, figure 16, 17, or 20) can improve shutoff. (Deep nicks should be machined out rather than ground out.) Use a good quality lapping compound of a mixture of 280 to 600-grit. Apply the compound to the bottom of the valve plug.

Assemble the valve to the extent that the cage and the cage retainer and bonnet spacer (if used) are in place and the bonnet is bolted to the valve body. A simple handle can be made from a piece of strap iron locked to the valve plug stem with nuts. Rotate the handle alternately in each direction to lap the seats. After lapping, remove the bonnet and clean the seat surfaces. Completely assemble as described in the Assembly portion of the Trim Maintenance procedure and test the valve for shutoff. Repeat the lapping procedure if leakage is still excessive.

Figure 7. Typical Balanced TSO Trim

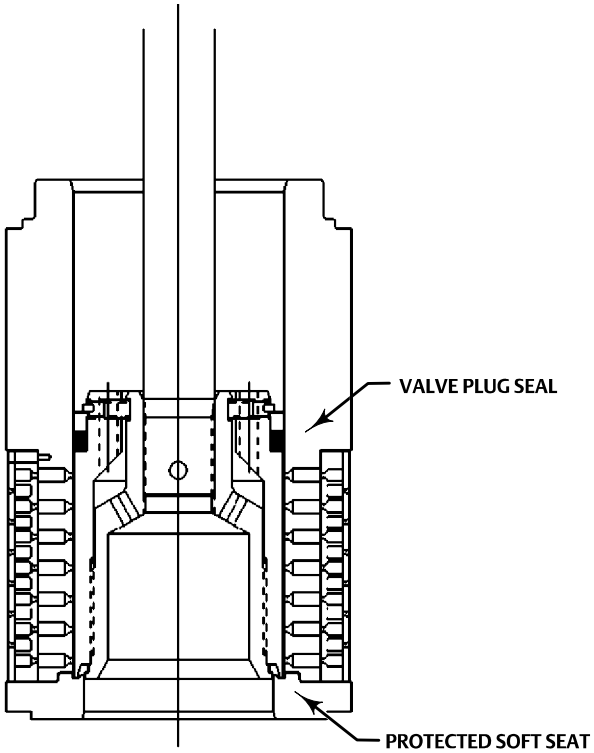

Valve Plug Maintenance

Except where indicated, key numbers in this section are referenced in figure 16 for standard NPS 1 through 6 constructions, figure 17 for Whisper Trim III, figures 18 and 19 for WhisperFlo trim, and figure 20 for Cavitrol III detail and the NPS 8 ET valve.

CAUTION

To avoid the valve plug seal ring (key 28) not sealing properly, be careful not to scratch the surfaces of the ring groove in the valve plug or any of the surfaces of the replacement ring.

1. With the valve plug (key 2) removed according to the Disassembly portion of the Trim Maintenance procedure, proceed as appropriate:

For the two-piece seal ring, The ring cannot be reused because it is a closed ring which must be pried and/or cut from the groove. Once the seal ring is removed, the elastomeric backup ring (key 29), which is also a closed ring, can be pried from the groove.

CAUTION

To avoid damaging the seal ring, slowly and gently stretch it for the following procedure. Avoid jerking sharply on the ring.

To install a new two-piece seal ring, apply a general purpose silicone-base lubricant to both the backup ring and seal ring (keys 29 and 28). Place the backup ring over the stem (key 7) and into the groove. Place the seal ring over the top edge of the valve plug (key 2) so that it enters the groove on one side of the valve plug. Slowly and gently stretch the seal ring and work it over the top edge of the valve plug. The PTFE material in the seal ring must be permitted time to cold-flow during the stretching procedure, so avoid jerking sharply on this ring. Stretching the seal ring over the valve plug may make it seem unduly loose when in the groove, but it will contract to its original size after insertion into the cage.

For the spring-loaded seal ring, the ring used on a valve plug having a 136.5 mm (5.375 inch) or less port diameter may be removed undamaged by first working the retaining ring (key 27) off with a screwdriver. Then carefully slide the metal backup ring (key 29) and seal ring (key 28) off the valve plug (key 2). The spring-loaded seal ring used on a valve plug having a 178 mm (7-inch) or greater port diameter must be carefully pried and/or cut from its groove. Therefore, it cannot be reused.

A spring-loaded seal ring must be installed so that its open side faces toward the valve stem, or toward the seat of the plug depending on flow direction, as shown in view A of figure 16 or 20. To install a spring-loaded seal ring on a valve plug with a 136.5 mm (5.375 inch) or less port diameter, slide the seal ring (key 28) onto the valve plug followed by the metal backup ring (key 29). Then install the retaining ring (key 27) by inserting one end in the groove and, while turning the plug, press the ring into the groove. Again, be careful not to scratch any surfaces of the ring or plug.

CAUTION

To avoid damaging the seal ring, slowly and gently stretch it for the following procedure. Avoid jerking sharply on the ring.

To install the seal ring on a valve plug with 178 mm (7-inch) or greater port diameter, lubricate it with a general purpose silicone-base lubricant. Then gently stretch the seal ring and work it over the top edge of the valve plug. The PTFE material in the seal ring must be permitted time to cold-flow during the stretching procedure, so avoid jerking sharply on the ring. Stretching the seal ring over the valve plug may make it seem unduly loose when in the groove, but it will contract to its original size after insertion into the cage.

CAUTION

Never reuse an old stem or adaptor with a new valve plug. Using an old stem or adaptor with a new plug requires drilling a new pin hole in the stem (or adaptor, in case an ENVIRO-SEAL bellows seal bonnet is being used). This drilling weakens the stem or adaptor and may cause failure in service. However, a used valve plug may be reused with a new stem or adaptor, except with Cavitrol III trim.

Note

The valve plug and valve plug stem for 2-stage Cavitrol III trim are a matched set and must be ordered together. If the 2-stage Cavitrol III valve plug or valve plug stem is damaged, replace the entire assembly (key 2, figure 20).

Note

For plain bonnets and style 1 extension bonnets, the valve plug (key 2), valve stem (key 7), and pin (key 8) are available completely assembled. Refer to the Key 2, 7, and 8 Valve Plug and Stem Assembly tables in the Parts List.

2. To replace the valve stem (key 7), drive out the pin (key 8). Unscrew the valve plug from the stem or adaptor.
3. To replace the adaptor (key 24, figure 14) on ENVIRO-SEAL bellows seal bonnets, place the plug stem assembly and valve plug in a soft-jaw chuck or other type of vise so that the jaws grip a portion of the valve plug that is not a seating surface. Drive out the pin (key 36, figure 14). Reverse the plug stem assembly in the soft-jaw chuck or vise. Grip the flat areas on the valve stem just below the threads for the actuator/stem connection. Unscrew the valve plug/adaptor assembly (key 24, figure 14) from the valve stem assembly (key 20, figure 14).
4. Screw the new stem or adaptor into the valve plug. Tighten to the torque value given in table 5. Refer to table 5 to select the proper hole size. Drill through the stem or adaptor, using the hole in the valve plug as a guide. Remove any chips or burrs and drive in a new pin to lock the assembly.

Table 5. Valve Stem Connection Assembly Torque and Pin Replacement

VALVE STEM DIAMETER		TORQUE, MINIMUM TO MAXIMUM		HOLE SIZE	
mm	Inches	N•m	Lbf•ft	mm	Inch
9.5	3/8	40-47	25-35	2.41 - 2.46	0.095 - 0.097
12.7	1/2	81-115	60-85	3.20 - 3.25	0.126 - 0.128
19.1	3/4	237-339	175-250	4.80 - 4.88	0.189 - 0.192
25.4	1	420-481	310-355	6.38 - 6.45	0.251 - 0.254
31.8	1-1/4	827-908	610-670	6.38 - 6.45	0.251 - 0.254

5. For ENVIRO-SEAL bellows seal bonnets, grip the flats of the stem extending out of the top of the bellows shroud with a soft-jaw chuck or other type of vise. Screw the valve plug/adaptor assembly onto the valve stem. Tighten as necessary to align the pin hole in the stem with one of the holes in the adaptor. Secure the adaptor to the stem with a new pin.

Assembly

Except where indicated, key numbers are referenced in figure 16 for standard NPS 1 through 6 constructions, figure 17 for Whisper Trim III detail, figures 18 and 19 for WhisperFlo detail, and figure 20 for Cavitrol III detail and the NPS 8 ET valve.

1. With a restricted-trim seat ring construction, install the adaptor gasket (key 14) and seat ring adaptor (key 5).
2. Install the seat ring gasket (key 13), seat ring or liner (key 9), or disk seat (key 22). With a PTFE-seat construction, install the disk and disk retainer (keys 21 and 23).
3. Install the cage or cage/baffle assembly (key 3). Any rotational orientation of the cage or assembly with respect to the valve body is acceptable. A Whisper Trim III cage designated by level A3, B3, or C3 may be installed with either end up. The level D3 cage/baffle assembly or Cavitrol III cage assembly, however, must be installed with the hole pattern end next to the seat ring. If a cage retainer (key 31) is to be used, place it on top of the cage.
4. **For constructions other than TSO (tight shutoff) trim**, slide the valve plug (key 2) and stem assembly, or valve plug and ENVIRO-SEAL bellows seal assembly, into the cage. Make sure the seal ring (key 28) is evenly engaged in the entrance chamfer at the top of the cage (key 3) or cage retainer (key 31) to avoid damaging the ring.
5. **For TSO (tight shutoff) trim constructions**, perform the following steps (refer to figures 6 and 7).
   a. Thread the outer plug onto the inner plug until the parts seat metal to metal, using a strap wrench or similar tool that will not damage the outer plug guide surfaces.
   b. Mark the top of the inner plug and outer plug with alignment marks in the assembled position.

c. Disassemble the outer plug from the inner plug and install the seal over the inner plug, so that the seal rests below the threaded area.

d. Thread the outer plug onto the inner plug and tighten with a strap wrench or similar tool until the alignment marks line up. This will ensure that the plug parts are metal to metal and the seal is compressed properly. Do not damage the outer plug guide surfaces.

e. Install set screws centering the inner plug in the outer plug and torque to 11 N•m (8 lbf•ft).

f. Assemble the piston ring, anti-extrusion rings, backup ring, and retainer.

6. For all constructions, place the gaskets (keys 12, 11 or 14 if used, and 10) and the shim (key 51) on top of the cage or cage retainer. If there is a cage adaptor (key 4) or a bonnet spacer (key 32), set it on the cage or cage retainer gaskets and place another flat sheet gasket (key 10) on top of the adaptor or spacer. If there is only a cage retainer, place another flat sheet gasket on the retainer.
7. With an NPS 8 ET valve, install the load ring (key 26).
8. Mount the bonnet on the valve body and complete assembly according to steps 10 through 14 of the Replacing Packing procedure. Be sure to observe the note prior to step 10.

ENVIRO-SEAL Bellows Seal Bonnet

Replacing a Plain or Extension Bonnet with an ENVIRO-SEAL Bellows Seal Bonnet (Stem/Bellows Assembly)

1. Remove the actuator and bonnet according to steps 1 through 5 of the Replacing Packing procedure in the Maintenance section.
2. With care, remove the valve plug and stem assembly from the valve body. If necessary, also lift out the cage.

CAUTION

To prevent possible product damage, cover the opening in the valve in the following procedure to protect the sealing surfaces and to prevent foreign material from getting into the valve body cavity.

3. Remove and discard the existing bonnet gasket. Cover the valve body opening to protect sealing surfaces and to prevent foreign material from entering the valve body cavity.

Note
The ENVIRO-SEAL stem/bellows assembly for easy-e valves is available only with a threaded and drilled plug/adaptor/stem connection. The existing valve plug can be reused with the new stem/bellows assembly or a new plug can be installed.

4. Inspect the existing valve plug. If the plug is in good condition, it can be reused with the new ENVIRO-SEAL stem/bellows assembly. To remove the existing valve plug from the stem, first, place the existing plug stem assembly and valve plug in a soft-jaw chuck or other type of vise so that the jaws grip a portion of the valve plug that is not a seating surface. Drive out or drill out the pin (key 8).
5. Reverse the plug stem assembly in the soft-jaw chuck or vise. Grip the valve stem in an appropriate place and unscrew the existing plug from the valve stem.

Table 6. Recommended Torque for ENVIRO-SEAL Bellows Seal Packing Flange Nuts

VALVE SIZE, NPS	VALVE STEM DIAMETER THROUGH PACKING	MINIMUM TORQUE		MAXIMUM TORQUE	
		N•m	Lbf•in	N•m	Lbf•in
1 - 2	1/2	2	22	4	33
3 - 8	1	5	44	8	67

CAUTION

When installing a valve plug on the ENVIRO-SEAL stem/bellows assembly, the valve stem must not be rotated. Damage to the bellows may result.

To avoid product damage, do not grip the bellows shroud or other parts of the stem/bellows assembly. Grip only the flat areas on the stem where it extends out of the top of the bellows shroud.

Note

The ENVIRO-SEAL stem/bellows assembly has a one-piece stem.

CAUTION

To avoid damaging parts, do not grip the valve plug on any seating surface in the following procedure.

6. To attach the valve plug to the stem of the new ENVIRO-SEAL stem/bellows assembly, first attach the plug to the adaptor (key 24). Locate the adaptor. Notice that a hole has not been drilled in the threads where the plug screws onto the adaptor. Secure the valve plug in a soft-jaw chuck or other type of vise. Do not grip the plug on any seating surface. Position the plug in the chuck or vise for easy threading of the adaptor. Thread the adaptor into the valve plug and tighten to the appropriate torque value.
7. Select the proper size of drill bit and drill through the adaptor using the hole in the valve plug as a guide. Remove any metal chips or burrs and drive in a new pin to lock the plug/adaptor assembly together.
8. Attach the plug/adaptor assembly to the ENVIRO-SEAL stem/bellows assembly by first securing the stem/bellows assembly in a soft-jaw chuck or other type of vise so that the jaws of the chuck or vise grip the flats of the stem extending out of the top of the bellows shroud. Screw the valve plug/adaptor assembly onto the valve stem. Tighten as necessary to align the pin hole in the stem with one of the holes in the adaptor. Secure the adaptor to the stem with a new pin.
9. Inspect the seat ring (key 9) and soft seat parts (keys 21, 22, and 23); replace, if necessary.
10. Place a new gasket (key 10) into the valve body in place of the bonnet gasket. Install the new stem/bellows assembly with valve plug/adaptor by placing it into the valve body on top of the new bellows gasket.
11. Place a new gasket (key 22) over the stem/bellows assembly. Place the new ENVIRO-SEAL bonnet over the stem/bellows assembly.

Figure 8. PTFE Packing Arrangements for Use in ENVIRO-SEAL Bellows Seal Bonnets

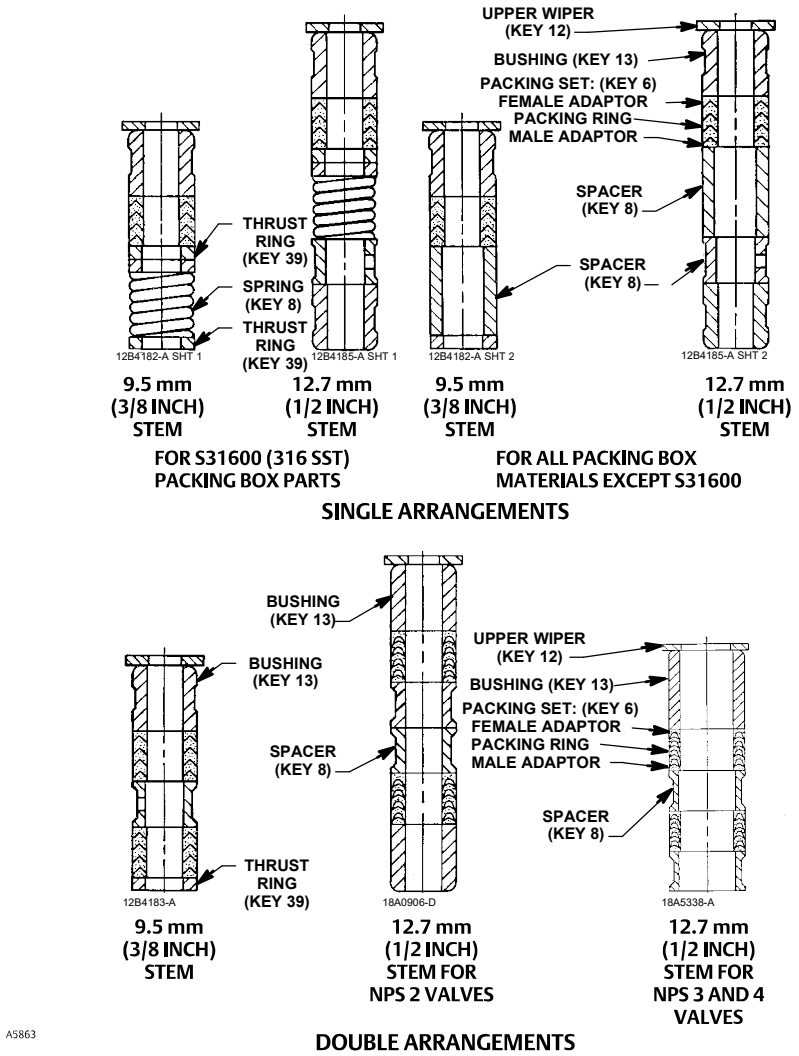

Note

Stud(s) and nut(s) should be installed such that the manufacturer's trademark and material grade marking is visible, allowing easy comparison to the materials selected and documented in the Emerson/Fisher serial card provided with this product.

⚠ WARNING

Personal injury or damage to equipment could occur if improper stud and nut materials or parts are used. Do not operate or assemble this product with stud(s) and nut(s) that are not approved by Emerson/Fisher engineering and/or listed on the serial card provided with this product. Use of unapproved materials and parts could lead to stresses exceeding the design or code limits intended for this particular service. Install studs with the material grade and manufacturer's identification mark visible. Contact your Emerson representative immediately if a discrepancy between actual parts and approved parts is suspected.

12. Properly lubricate the bonnet stud bolts. Install and tighten the bonnet hex nuts to the proper torque.
13. Install new packing and the metal packing box parts according to the appropriate arrangement in figure 8 or 9.
14. Install the packing flange. Properly lubricate the packing flange stud bolts and the faces of the packing flange nuts.

For graphite packing, tighten the packing flange nuts to the maximum recommended torque shown in table 6. Then, loosen the packing flange nuts, and retighten them to the recommended minimum torque shown in table 6.

For other packing types, tighten the packing flange nuts alternately in small equal increments until one of the nuts reaches the minimum recommended torque shown in table 6. Then, tighten the remaining flange nut until the packing flange is level and at a 90-degree angle to the valve stem.

15. Install travel indicator parts and stem locknuts; mount the actuator on the valve body according to the procedure in the appropriate actuator instruction manual.

Replacement of an Installed ENVIRO-SEAL Bellows Seal Bonnet (Stem/Bellows Assembly)

1. Remove the actuator and bonnet according to steps 1 through 5 of the Replacing Packing procedure in the Maintenance section.

CAUTION

To prevent possible product damage, cover the opening in the valve in the following procedure to protect the sealing surfaces and to prevent foreign material from getting into the valve body cavity.

2. Carefully remove the ENVIRO-SEAL stem/bellows assembly. If necessary, also lift out the cage. Remove and discard the existing bonnet gasket and bellows gasket. Cover the valve body opening to protect sealing surfaces and to prevent foreign material from entering the valve body cavity.

CAUTION

The ENVIRO-SEAL stem/bellows assembly for easy-e valves is available only with a threaded and drilled plug/adaptor/stem connection. The existing valve plug can be reused with the new stem/bellows assembly or a new plug can be installed. If the existing valve plug is reused, and the adaptor is in good condition, it may be also reused. However, never reuse an old adaptor with a new valve plug. Using an old adaptor with a new valve plug requires drilling a new pin hole in the adaptor. This drilling weakens the adaptor and may cause failure in service. However, a used valve plug may be reused with a new adaptor, except with Cavitrol III trim.

3. Inspect the existing valve plug and adaptor. If they are in good condition, they can be reused with the new stem/bellows assembly and they do not need to be separated.

CAUTION

When removing/installing a valve plug on the ENVIRO-SEAL stem/bellows assembly, the valve stem must not be rotated. Damage to the bellows may result.

To avoid product damage, do not grip the bellows shroud or other parts of the stem/bellows assembly. Grip only the flat areas on the stem where it extends out of the top of the bellows shroud.

Note

The ENVIRO-SEAL stem/bellows assembly has a one-piece stem.

4. If the valve plug and adaptor are not in good condition and must be replaced, first remove the valve plug/adaptor assembly from the stem/bellows assembly; then remove the valve plug from the adaptor. First, place the stem/bellows assembly and valve plug in a soft-jaw chuck or other type of vise so that the jaws grip a portion of the valve plug that is not a seating surface. Drive out or drill out the pin (key 8, figure 16, 17, or 20). Drive out the pin (key 36, figure 14).
5. Reverse the stem/bellows and plug/adaptor assembly in the soft-jaw chuck or vise. Grip the flat areas on the valve stem just below the threads for the actuator/stem connection. Unscrew the plug/adaptor assembly from the stem/bellows assembly. Unscrew the valve plug from the adaptor.
6. To attach either the existing valve plug or a new one to the stem of the new ENVIRO-SEAL stem/bellows assembly, first attach the plug to the adaptor (if the valve plug was removed from the adaptor) as follows:

   a. Locate the adaptor. Notice that a hole has not been drilled in the threads where the plug screws onto the adaptor.

CAUTION

To avoid damaging parts, do not grip the valve plug on any seating surface in the following procedure.

Figure 9. Double Graphite Ribbon/Filament Arrangements for Use in ENVIRO-SEAL Bellows Seal Bonnets

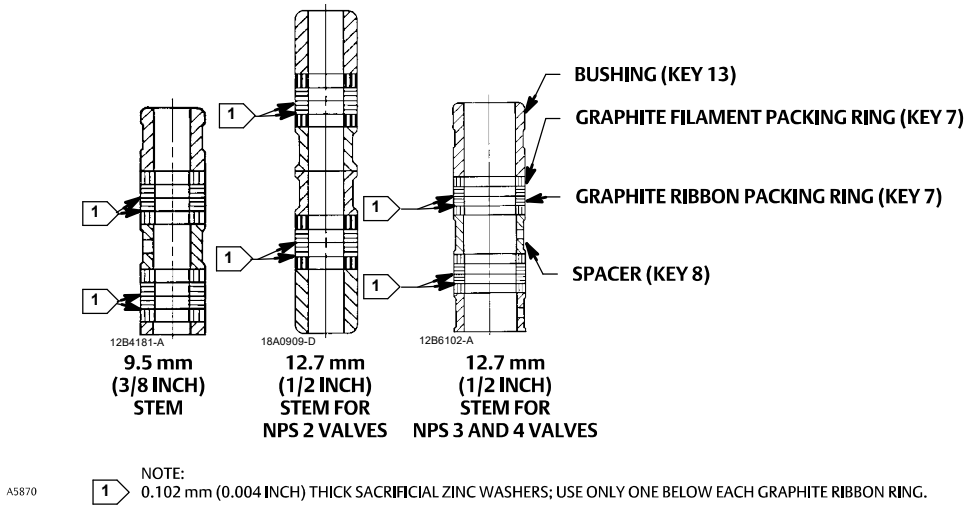

   b. Secure the valve plug in a soft-jaw chuck or other type of vise. Do not grip the plug on any seating surface. Position the plug in the chuck or vise for easy threading of the adaptor.

   c. Thread the adaptor into the valve plug and tighten to the appropriate torque value.

7. Complete the installation by following steps 7 through 9 and steps 12 through 15 of the ENVIRO-SEAL Bellows Seal Bonnet installation instructions found on pages 14 and 15.

Purging the ENVIRO-SEAL Bellows Seal Bonnet

The ENVIRO-SEAL bellows seal bonnet can be purged or leak tested. Refer to figure 14 for an illustration of an ENVIRO-SEAL bellows seal bonnet, and perform the following steps for purging or leak testing.

1. Remove the two diametrically opposed pipe plugs (key 16).
2. Connect a purging fluid to one of the pipe plug connections.
3. Install appropriate piping or tubing in the other pipe plug connection to pipe away the purging fluid or to make a connection to an analyzer for leak testing.

4. When purging or leak testing has been completed, remove the piping or tubing and reinstall the pipe plugs (key 16).

Table 7. Standard Material Designations

Standard Designation	Common Name or Tradename
CoCr-A Hardfacing Alloy R30006 S17400 SST S31600 SST	CoCr-A Alloy 6 Casting 17-4PH Stainless Steel 316 Stainless Steel
S41000 SST S41600 SST WCC Carbon Steel Casting	410 Stainless Steel 416 Stainless Steel WCC

Parts Ordering

Each body-bonnet assembly is assigned a serial number which can be found on the valve. This same number also appears on the actuator nameplate when the valve is shipped from the factory as part of a control valve assembly. Refer to the serial number when contacting your Emerson sales office or Local Business Partner for technical assistance. When ordering replacement parts, refer to the serial number and to the eleven-character part number for each part required from the following parts kit or parts list information.

Refer to table 7 for standard and common material designations.

⚠ WARNING

Use only genuine Fisher replacement parts. Components that are not supplied by Emerson Automation Solutions should not, under any circumstances, be used in any Fisher valve, because they may void your warranty, might adversely affect the performance of the valve, and could cause personal injury and property damage.

Parts Kits

Gasket Kits

Gasket Kits (includes keys 10, 11, 12, 13, and 51; plus 14 and 20 on some restricted capacity valves)

DESCRIPTION	Standard Trim Cage Whisper Trim I Cage Cavitrol III - 1 Stage Cage	Cavitrol III - 2 Stage Cage Whisper Trim III Cage WhisperFlo Cage
	-198 to 593°C (-325 to 1100°F)	-198 to 593°C (-325 to 1100°F)
Full Capacity Valves	**Part Number**	**Part Number**
NPS 1 & 1-1/4	RGASKETX162	RGASKETX422
NPS 1-1/2 (NPS 2 EAT)	RGASKETX172	RGASKETX432
NPS 2	RGASKETX182	RGASKETX442
NPS 2-1/2 (NPS 3 EAT)	RGASKETX192	RGASKETX452
NPS 3 (NPS 4 EAT)	RGASKETX202	RGASKETX462
NPS 4 (NPS 6 EAT)	RGASKETX212	RGASKETX472
NPS 6	RGASKETX222	RGASKETX482
NPS 8	RGASKETX232	10A3265X152
Restricted Capacity Valves w/ Metal Seating		
NPS 1-1/2 x 1 (NPS 2 x 1 EAT)	RGASKETX242	---
NPS 2 x 1	RGASKETX252	---
NPS 2-1/2 x 1-1/2 (NPS 3 x 1-1/2 EAT)	RGASKETX262	---
NPS 3 x 2 (NPS 4 x 2 EAT)	RGASKETX272	---
NPS 4 x 2-1/2 (NPS 6 x 2-1/2 EAT)	RGASKETX282	---

Packing Kits

Standard Packing Repair Kits (Non Live-Loaded)

REPAIR KIT MATERIAL	STEM DIAMETER, mm (INCH) YOKE BOSS DIAMETER, mm (INCH)				
	9.5 (3/8) 54 (2-1/8)	12.7 (1/2) 71 (2-13/16)	19.1 (3/4) 90 (3-9/16)	25.4 (1) 127 (5)	31.8 (1-1/4) 127 (5, 5H)
	Part Number				
PTFE (Contains keys 6, 8, 10, 11, and 12)	RPACKX00012	RPACKX00022	RPACKX00032	RPACKX00342	RPACKX00352
Double PTFE (Contains keys 6, 8, 11, and 12)	RPACKX00042	RPACKX00052	RPACKX00062	RPACKX00362	RPACKX00372
PTFE/Composition (Contains keys 7, 8, 11, and 12)	RPACKX00072	RPACKX00082	RPACKX00092	---	---
Single Graphite Ribbon/Filament (Contains keys 7 [ribbon ring], 7 [filament ring], 8, and 11)	RPACKX00102	RPACKX00112	RPACKX00122	---	---
Single Graphite Ribbon/Filament (Contains keys 7 [ribbon ring], 7 [filament ring], and 11)	---	---	---	RPACKX00532	RPACKX00542
Single Graphite Ribbon/Filament (Contains keys 7 [ribbon ring], 7 [filament ring])	RPACKX00132	RPACKX00142	RPACKX00152	---	---
Double Graphite Ribbon/Filament (Contains keys 7 [ribbon ring], 7 [filament ring], 8, and 11)	RPACKX00162	RPACKX00172	RPACKX00182	---	---

ENVIRO-SEAL Packing Retrofit Kits

Retrofit kits include parts to convert valves with existing standard bonnets to the ENVIRO-SEAL packing box construction. Refer to figure 11 for key numbers for PTFE packing, to figure 12 for key numbers for Graphite ULF packing, and to figure 13 for key numbers for duplex packing. PTFE kits include keys 200, 201, 211, 212, 214, 215, 216, 217, 218, tag, and cable tie. Graphite ULF kits include keys 200, 201, 207, 208, 209, 210, 211, 212, 214, 217, tag, and cable tie. Duplex kits include keys 200, 201, 207, 209, 211, 212, 214, 215, 216, 217, tag, and cable tie.

Stems and packing box constructions that do not meet Emerson stem finish specifications, dimensional tolerances, and design specifications, may adversely alter the performance of this packing kit.

For part numbers of individual components in the ENVIRO-SEAL packing kits, refer to instruction manual ENVIRO-SEAL Packing System for Sliding-Stem Valves, D101642X012.

ENVIRO-SEAL Packing Retrofit Kits

PACKING MATERIAL	STEM DIAMETER, mm (INCH) YOKE BOSS DIAMETER, mm (INCH)				
	9.5 (3/8) 54 (2-1/8)	12.7 (1/2) 71 (2-13/16)	19.1 (3/4) 90 (3-9/16)	25.4 (1) 127 (5)	31.8 (1-1/4) 127 (5, 5H)
	Part Number				
Double PTFE	RPACKXRT012	RPACKXRT022	RPACKXRT032	RPACKXRT042	RPACKXRT052
Graphite ULF	RPACKXRT262	RPACKXRT272	RPACKXRT282	RPACKXRT292	RPACKXRT302
Duplex	RPACKXRT212	RPACKXRT222	RPACKXRT232	RPACKXRT242	RPACKXRT252

ENVIRO-SEAL Packing Repair Kits

Repair kits include parts to replace the "soft" packing materials in valves that already have ENVIRO-SEAL packing arrangements installed or in valves that have been upgraded with ENVIRO-SEAL retrofit kits. Refer to figure 11 for key numbers for PTFE packing, to figure 12 for key numbers for Graphite ULF packing, and to figure 13 for key numbers for duplex packing. PTFE repair kits include keys 214, 215, and 218. Graphite ULF repair kits include keys 207, 208, 209, 210, and 214. Duplex repair kits include keys 207, 209, 214, and 215.

Stems and packing box constructions that do not meet Emerson stem finish specifications, dimensional tolerances, and design specifications, may adversely alter the performance of this packing kit.

For part numbers of individual components in the ENVIRO-SEAL packing kits, refer to instruction manual ENVIRO-SEAL Packing System for Sliding-Stem Valves, D101642X012.

ENVIRO-SEAL Packing Repair Kits

PACKING MATERIAL	STEM DIAMETER, mm (INCH) YOKE BOSS DIAMETER, mm (INCH)				
	9.5 (3/8) 54 (2-1/8)	12.7 (1/2) 71 (2-13/16)	19.1 (3/4) 90 (3-9/16)	25.4 (1) 127 (5)	31.8 (1-1/4) 127 (5, 5H)
	Part Number				
Double PTFE (contains keys 214, 215, & 218)	RPACKX00192	RPACKX00202	RPACKX00212	RPACKX00222	RPACKX00232
Graphite ULF (contains keys 207, 208, 209, 210, and 214)	RPACKX00592	RPACKX00602	RPACKX00612	RPACKX00622	RPACKX00632
Duplex (contains keys 207, 209, 214, and 215)	RPACKX00292	RPACKX00302	RPACKX00312	RPACKX00322	RPACKX00332

easy-e Low-e Bonnet Repair Kits

Kit consists of plain bonnet, Graphite / Inconel gasket set, ENVIRO-SEAL packing retro-fit kit, packing flange, packing flange studs and nuts. New stem is not included.

Bonnet Material	Packing Type	Valve Size, NPS	Stem Size	Part Number
WCC(1)	ENVIRO-SEAL PTFE	0.5-1.25	3/8”	RLEPBNTX012
		1.5	3/8”	RLEPBNTX022
		2	1/2”	RLEPBNTX032
		2.5	1/2”	RLEPBNTX042
		3	1/2”	RLEPBNTX052
		4	1/2”	RLEPBNTX062
		6	3/4”	RLEPBNTX072
	ENVIRO-SEAL Graphite ULF	0.5-1.25	3/8”	RLEPBNTX152
		1.5	3/8”	RLEPBNTX162
		2	1/2”	RLEPBNTX172
		2.5	1/2”	RLEPBNTX182
		3	1/2”	RLEPBNTX192
		4	1/2”	RLEPBNTX202
		6	3/4”	RLEPBNTX212
SST(1)	ENVIRO-SEAL PTFE	0.5-1.25	3/8”	RLEPBNTX082
		1.5	3/8”	RLEPBNTX092
		2	1/2”	RLEPBNTX102
		2.5	1/2”	RLEPBNTX112
		3	1/2”	RLEPBNTX122
		4	1/2”	RLEPBNTX132
	ENVIRO-SEAL Graphite ULF	0.5-1.25	3/8”	RLEPBNTX222
		1.5	3/8”	RLEPBNTX232
		2	1/2”	RLEPBNTX242
		2.5	1/2”	RLEPBNTX252
		3	1/2”	RLEPBNTX262
		4	1/2”	RLEPBNTX272
WCC	ENVIRO-SEAL Duplex	0.5-1.25	3/8”	RLEPBNTX292
		1.5	3/8”	RLEPBNTX302
		2	1/2”	RLEPBNTX322
		2.5	1/2”	RLEPBNTX332
		3	1/2”	RLEPBNTX342
		4	1/2”	RLEPBNTX352
		6	3/4”	RLEPBNTX362
SST	ENVIRO-SEAL Duplex	0.5-1.25	3/8”	RLEPBNTX372
		1.5	3/8”	RLEPBNTX392
		2	1/2”	RLEPBNTX412
		2.5	1/2”	RLEPBNTX422
		3	1/2”	RLEPBNTX432
		4	3/4”	RLEPBNTX442

1. Compliant with NACE MR0175-2003 and prior, NACE MR0175 / ISO 15156 (all revisions), and NACE MR0103 (all revisions).

Figure 10. Typical HIGH-SEAL Graphite ULF Packing System

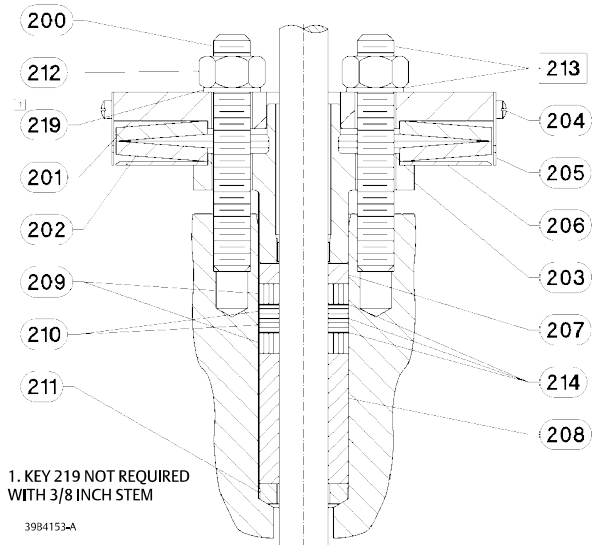

Figure 11. Typical ENVIRO-SEAL Packing System with PTFE Packing

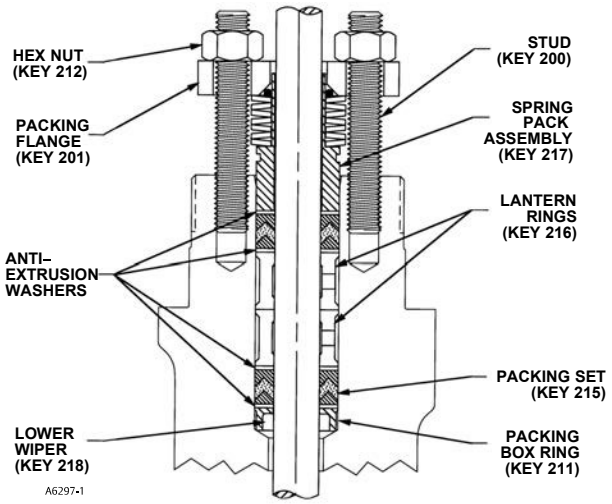

Figure 12. Typical ENVIRO-SEAL Packing System with Graphite ULF Packing

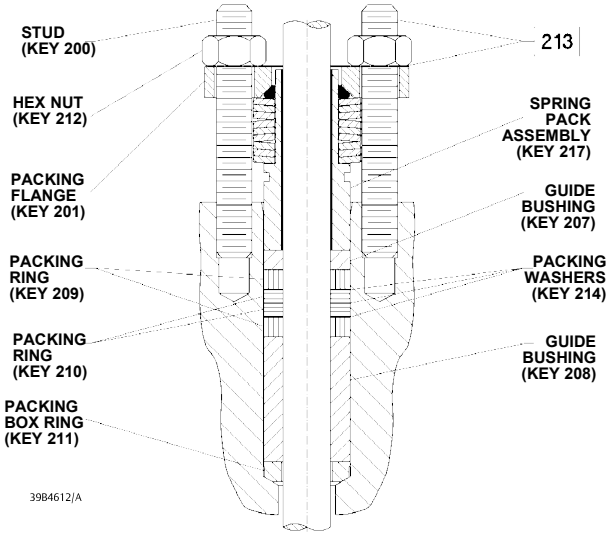

Figure 13. Typical ENVIRO-SEAL Packing System with Duplex Packing

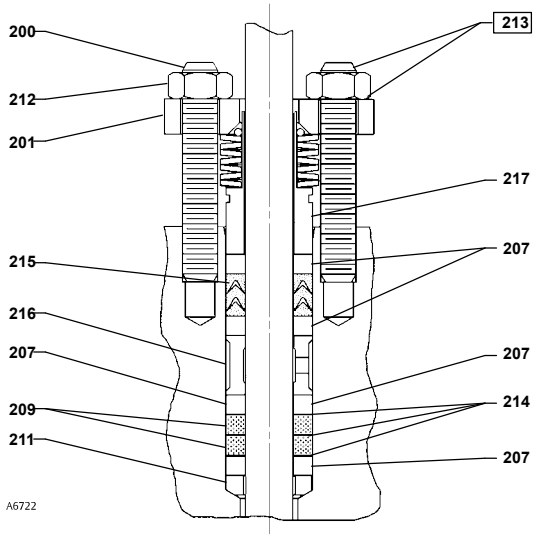

Parts List

Note
Part numbers are shown for recommended spares only. For part numbers not shown, contact your Emerson sales office or Local Business Partner.

Bonnet (figures 3 through 9, figure 14)

Key	Description
1	Bonnet/ENVIRO-SEAL bellows seal bonnet If you need a bonnet or an ENVIRO-SEAL bellows seal bonnet as a replacement part, order by valve size and stem diameter, serial number, and desired material.
2	Extension Bonnet Baffle
3	Packing Flange
3	ENVIRO-SEAL bellows seal packing flange
4	Packing Flange Stud
4	ENVIRO-SEAL bellows seal stud bolt
5	Packing Flange Nut
5	ENVIRO-SEAL bellows seal hex nut
6*	Packing set, PTFE
6*	ENVIRO-SEAL bellows seal packing set
7*	Packing ring, PTFE composition
7*	ENVIRO-SEAL bellows seal packing ring
8	Spring
8	Lantern ring
8	ENVIRO-SEAL bellows seal spring
8	ENVIRO-SEAL bellows seal spacer
10	Special washer
11*	Packing Box Ring
12*	Upper Wiper, felt
12*	ENVIRO-SEAL bellows seal upper wiper
13	Packing Follower
13*	ENVIRO-SEAL bellows seal bushing
13*	ENVIRO-SEAL bellows seal bushing/liner
14	Pipe Plug
14	Lubricator
14	Lubricator/Isolating Valve
15	Yoke Locknut
15	ENVIRO-SEAL bellows seal Locknut
16	Pipe Plug
16	ENVIRO-SEAL bellows seal pipe plug
20*	ENVIRO-SEAL bellows seal stem/bellows assembly
22*	ENVIRO-SEAL bellows seal bonnet gasket
24	ENVIRO-SEAL bellows seal adaptor
25	Cap Screw
26	Hex Nut
27	Pipe Nipple for lubricator/isolating valve
28	ENVIRO-SEAL bellows seal nameplate, warning
29	ENVIRO-SEAL bellows seal drive screw
34	Lubricant, Anti-Seize (not included with valve)
36*	ENVIRO-SEAL bellows seal pin
37	ENVIRO-SEAL bellows seal warning tag
38	ENVIRO-SEAL bellows seal tie
39	ENVIRO-SEAL bellows seal thrust ring

*Recommended spare parts

Figure 14. Typical Bonnets

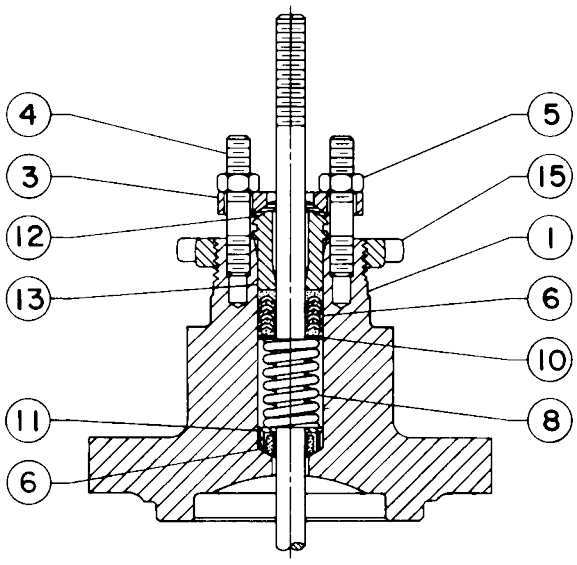

PLAIN BONNET

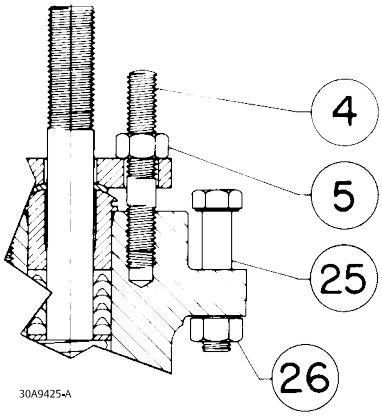

DETAIL OF 127 mm (5-INCH) YOKE BOSS ACTUATOR BOLTING

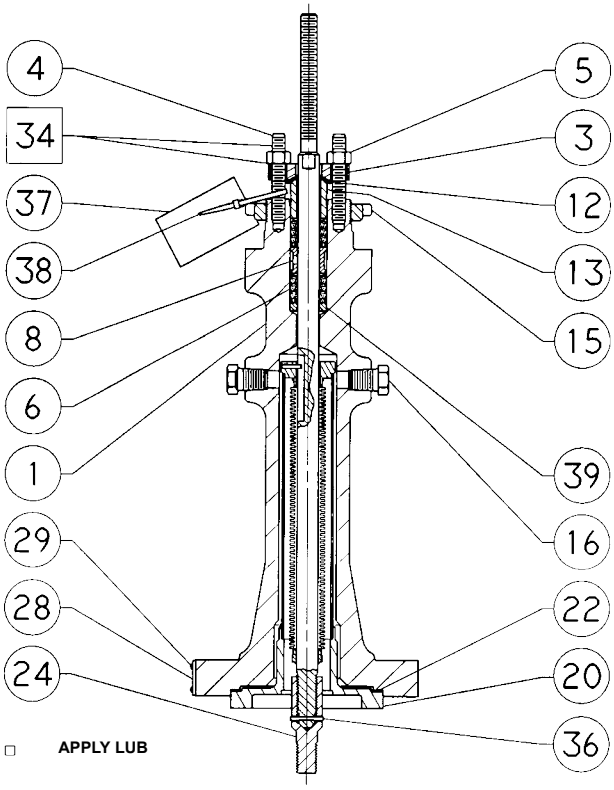

ENVIRO-SEAL BELLOWS SEAL BONNET

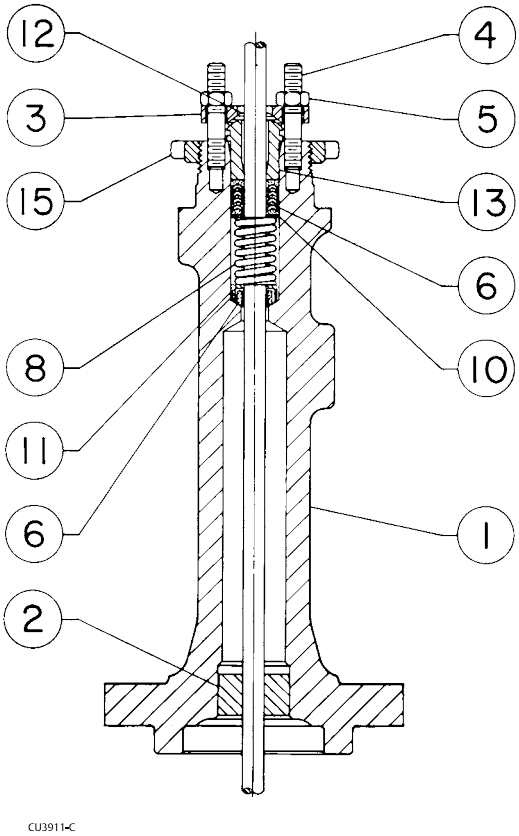

STYLE 1 OR 2 EXTENSION BONNET

Figure 15. Alternate Configurations

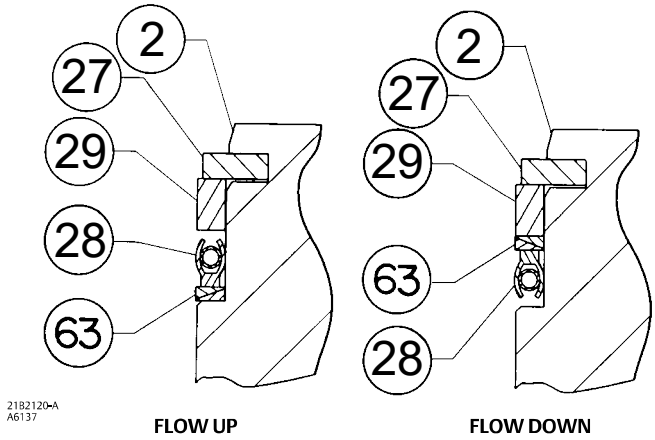

NPS 1 TO 8 ET USING PEEK ANTI-EXTRUSION RINGS

Key	Description
	Valve Body (figures 16 through 21)
1	Valve Body If you need a valve body as a replacement part, order by valve size, serial number, and desired material.
2*	Valve plug
3*	Cage
4	Trim adaptor
5	Trim adaptor
7*	Valve plug stem
8*	Pin
9*	Liner
9*	Seat Ring
10*	Bonnet Gasket
11*	Cage Gasket
12*	Spiral-Wound Gasket
13*	Seat Ring or Liner Gasket
14*	Adaptor Gasket
15	Cap Screw
15	Stud
16	Nut
17	Pipe Plug, for use in valves with drain tapping only
18	Flow Direction Arrow
19	Drive Screw
20*	Adaptor Gasket
21*	Seat Disk Retainer
22*	Disk Seat
23*	Disk
24*	Seal Ring (EAT)
25*	Backup Ring (EAT)
26	Load Ring (for NPS 8 ET only)
27*	Retaining Ring
27*	Shim (EAT)
28*	Seal Ring (ET)
29*	Backup Ring (ET)
31*	Whisper Trim III Cage Retainer for Levels A3, B3 & C3 (NPS 6 ET only)
31*	Whisper Trim III Cage Retainer & Baffle
32	Cavitrol III Bonnet Spacer
32	Whisper Trim III Bonnet Spacer (NPS 6 ET only)
51*	Shim
54	Wire
63*	Anti-Extrusion Ring

*Recommended spare parts

Figure 16. NPS 1 Through 6 Fisher ET and EAT Valves

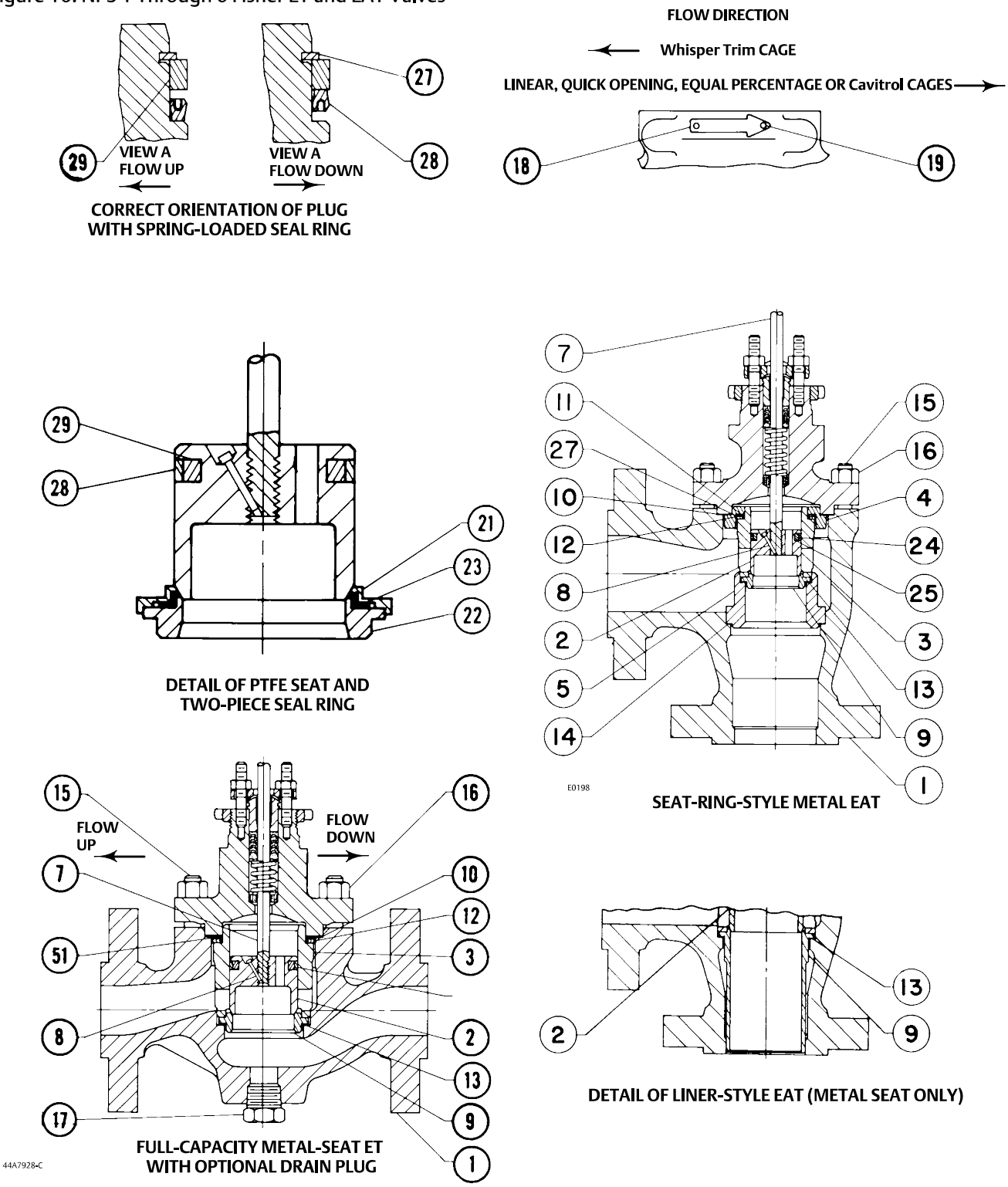

Figure 17. Fisher ET Valve Assembly with Whisper Trim III Cage and Optional Drain Plug

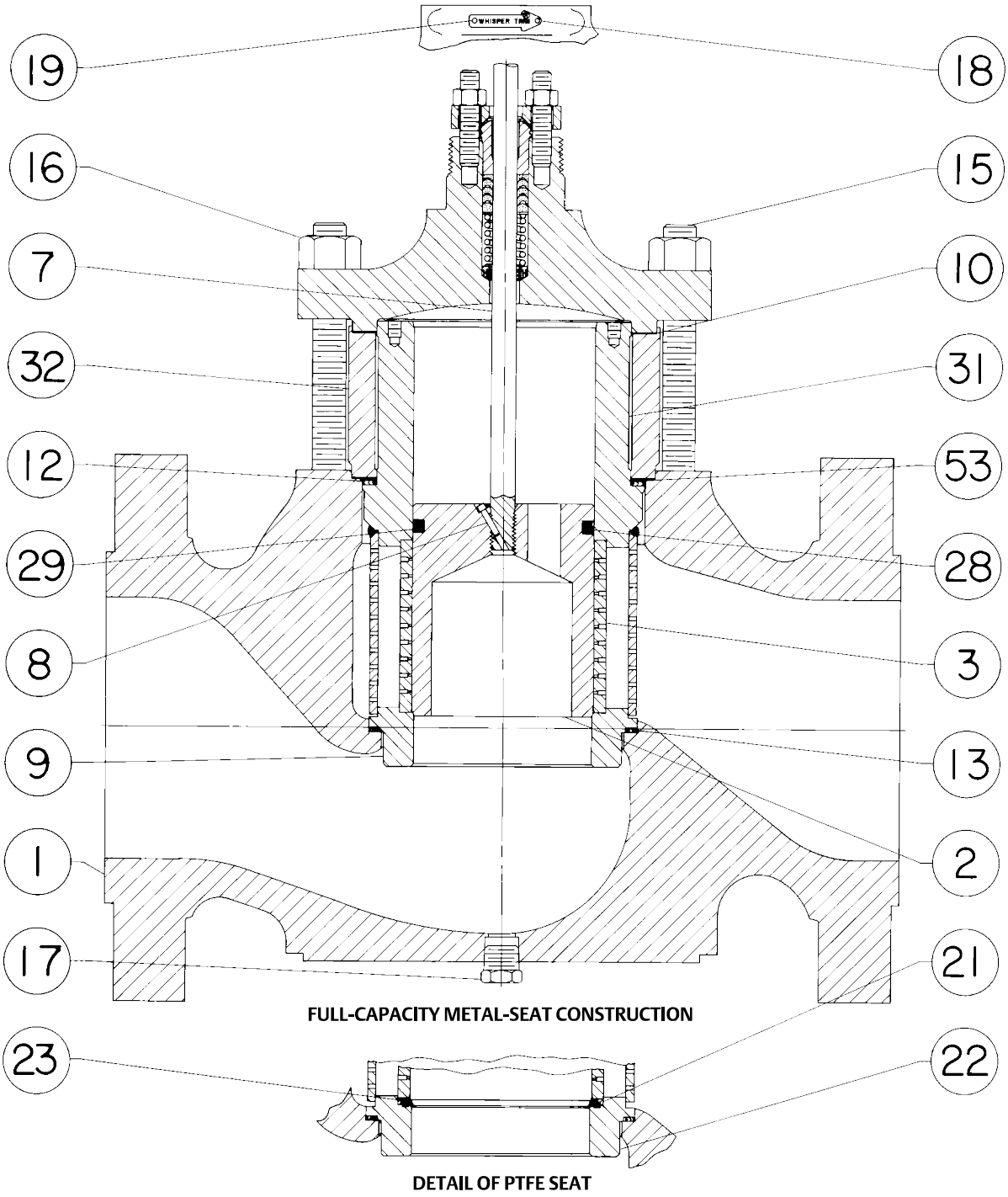

E0197

Figure 18. Fisher ET Valve Assembly with WhisperFlo Cage and Optional Drain Plug

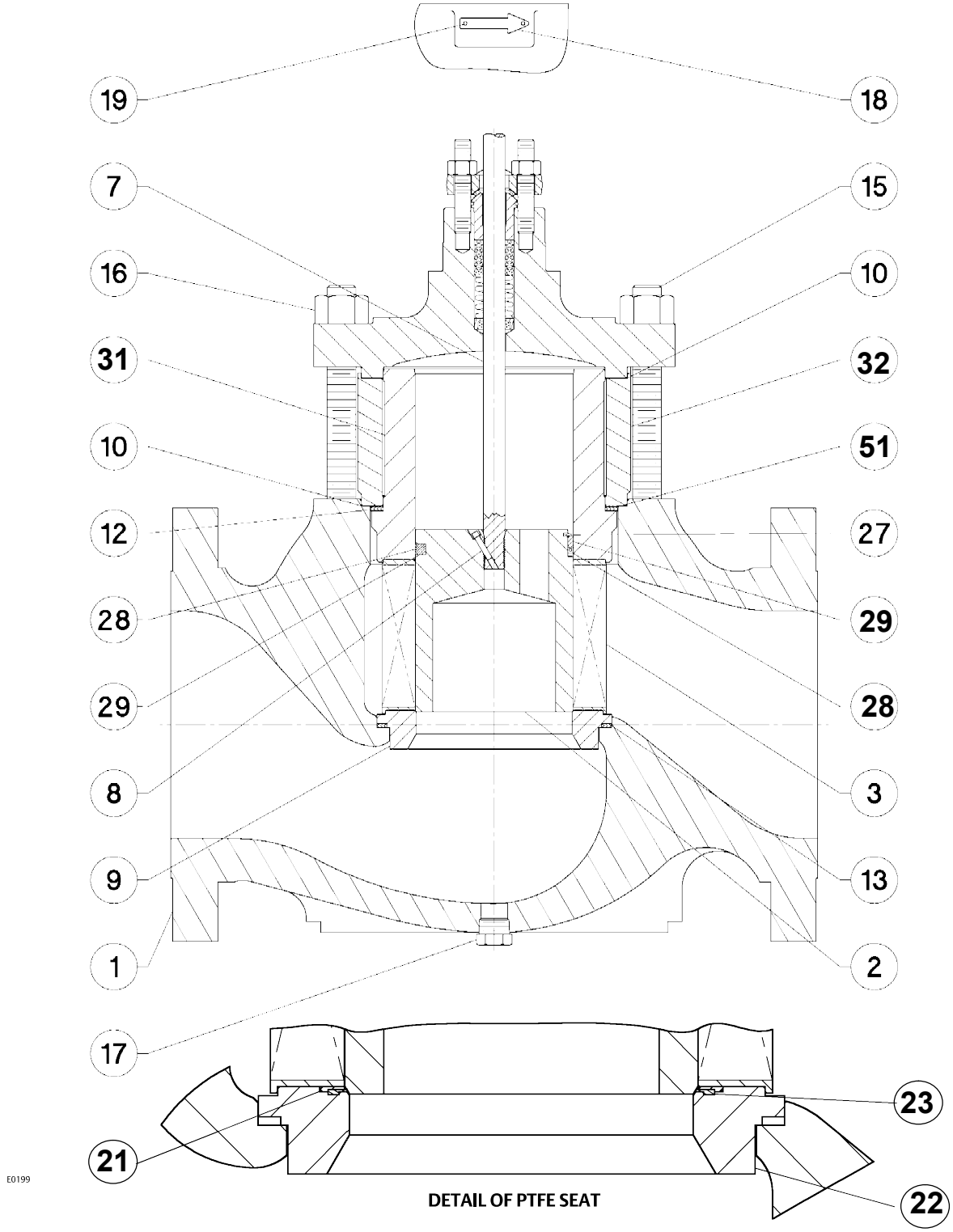

Figure 19. NPS 8 Fisher ET Valve Assembly with WhisperFlo Cage and Optional Drain Plug

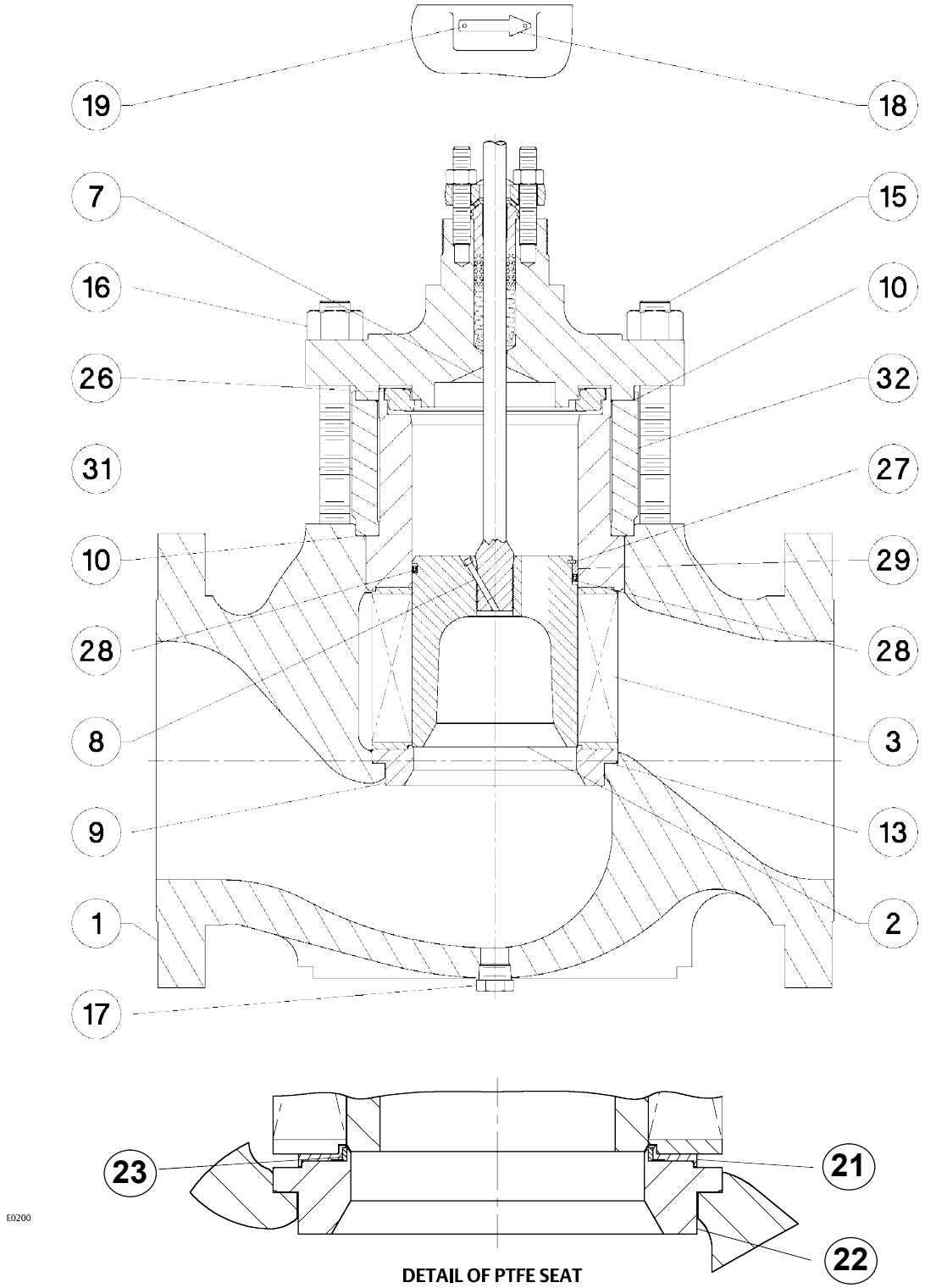

Figure 20. Details of Cavitrol III and NPS 8 Fisher ET Valves with Optional Drain Plug

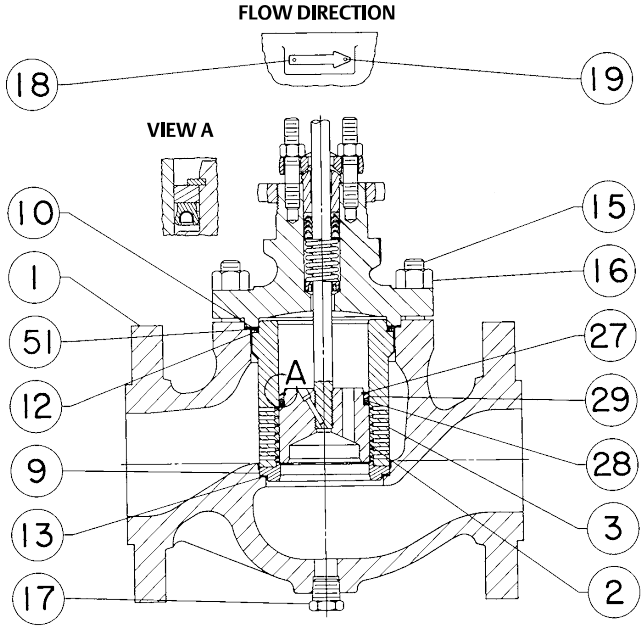

1-STAGE Cavitrol III CONSTRUCTIONS THRU NPS 6 SHOWING CORRECT ORIENTATION OF PLUG WITH SPRING-LOADED SEAL RING

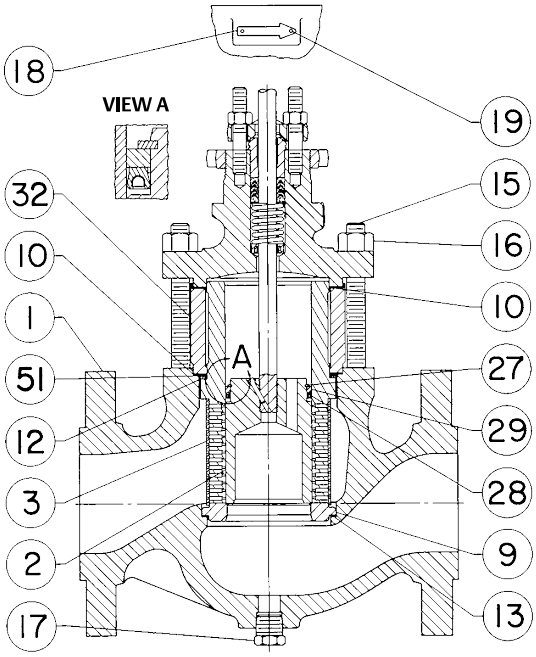

NPS 1 THROUGH 6 VALVE SIZE

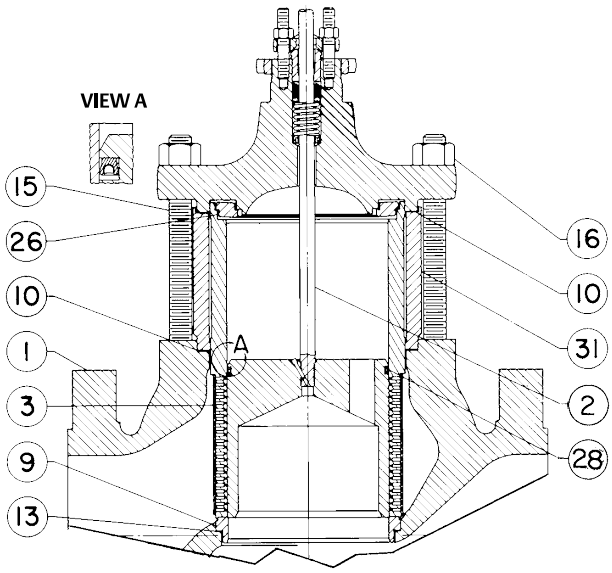

NPS 8 VALVE SIZE

PLUG AND SEAL RING WITH SPRING LOADING SHOWN IN CORRECT ORIENTATION FOR 2-STAGE Cavitrol III CAGE

Figure 21. Gasket Set Detail shown with Optional Drain Plug

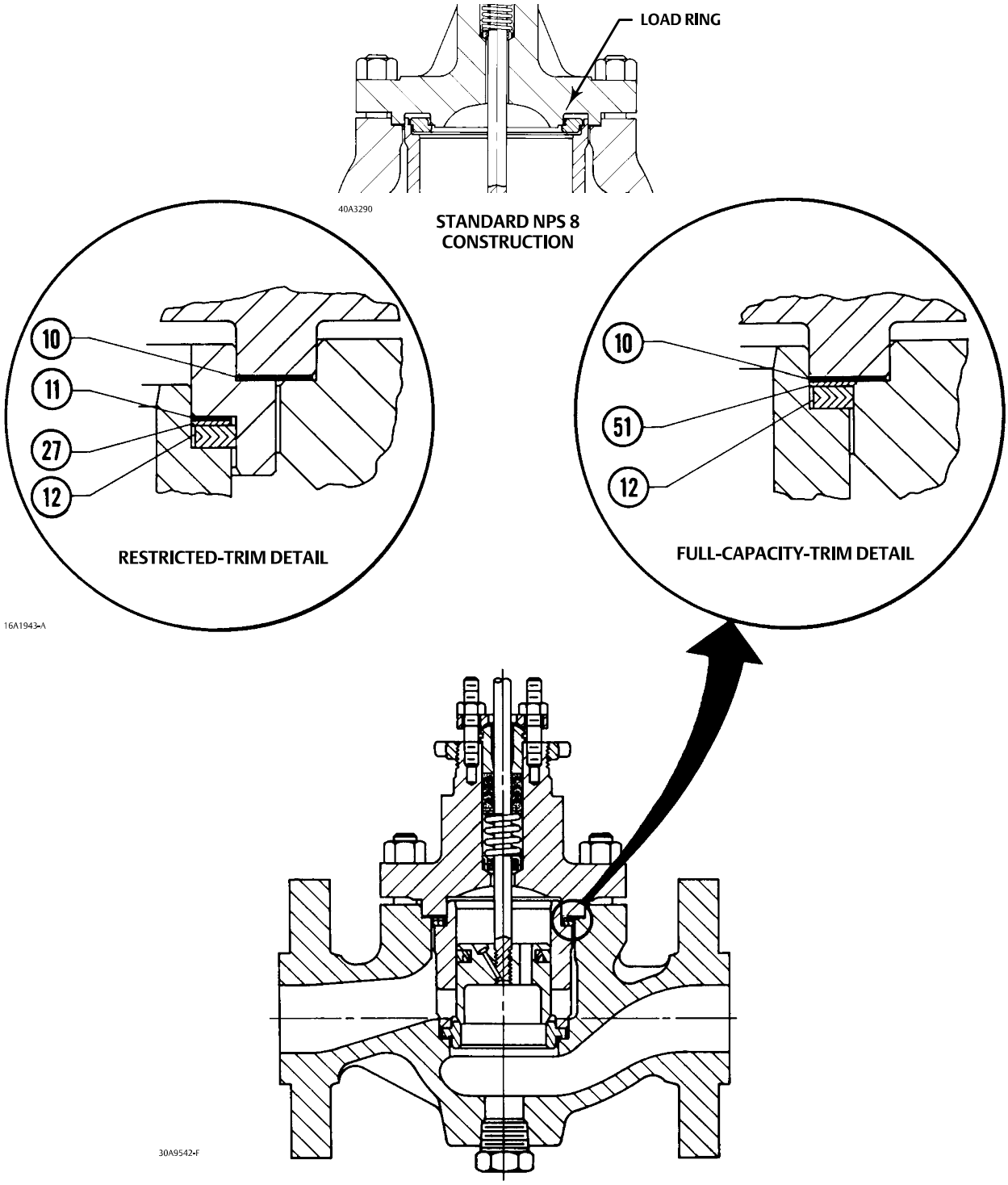

Actuator Groups

Group 1 54 mm (2-1/8 inches), 71 mm (2-13/16 inches), or 90 mm (3-9/16 inches) Yoke Boss	Group 100 127 mm (5 inches) Yoke Boss 3 inches maximum travel	Group 401 90.5 mm (3-9/16 inches) Yoke Boss 3.25 to 4 inches maximum travel	Group 404 127 mm (5 inches) Yoke Boss 4 inches maximum travel
585C 1B 618 644 & 645 657 & 667—76.2 mm (3 inches) maximum travel 1008—71.4 mm (2-13/16 inches) Yoke Boss	585C 657 1008	657 657 MO 657-4 657-4 MO 667 667 MO 667-4 667-4 MO	667 667-4
			Group 405 127 mm (5 inches) Yoke Boss 4 inches maximum travel
			657 MO 657-4 MO
		Group 402 90.5 mm (3-9/16 inches) Yoke Boss 4 inches maximum travel	Group 406 127 mm (5 inches) Yoke Boss 4 inches maximum travel
	Group 101 127 mm (5 inches) Yoke Boss 3 inches maximum travel	457-7 585C	667 MO 667-4 MO
	667	Group 403 90.5 mm (3-9/16 inches) Yoke Boss 4 inches maximum travel	Group 407 127 mm (5 inches) Yoke Boss 4 inches maximum travel
	Group 400 71.4 mm (2-13/16 inches) Yoke Boss 4 inches maximum travel	585C 1008	585C 657
	585C	Group 801 90.5 mm (3-9/16 inches) Yoke Boss 8 inches maximum travel	Group 802 127 mm (5 inches) Yoke Boss 8 inches maximum travel
		585C	585C

Gaskets and Shims Parts Kits(8)

Valve Size, NPS		Standard Trim Cage Whisper Trim I Cage Cavitrol III - 1 Stage Cage	Cavitrol III - 2 Stage Cage Whisper Trim III Cage WhisperFlo Cage	VALVE SIZE, NPS		Standard Trim Cage Whisper Trim I Cage Cavitrol III - 1 Stage Cage	Cavitrol III - 2 Stage Cage Whisper Trim III Cage WhisperFlo Cage
ET	EAT	-198 to 593°C (-325 to 1100°F)		ET	EAT	-198 to 593°C (-325 to 1100°F)	
		Part Number				Part Number	
1 or 1-1/4	1	RGASKETX162(1)	RGASKETX422(2)	3	4	RGASKETX202(1)	RGASKETX462(2)
1-1/2	2	RGASKETX172(1)	RGASKETX432(2)	3 x 2	4 x 2	RGASKETX272(3)	---
1-1/2 x 1	2 x 1	RGASKETX242(4)	---	4	6	RGASKETX212(1)	RGASKETX472(2)
2	---	RGASKETX182(1)	RGASKETX442(2)	4 x 2-1/2	6 x 2-1/2	RGASKETX282(3)	---
2 x 1	---	RGASKETX252(3)	---	6	---	RGASKETX222(5)	RGASKETX482(2)
2-1/2	3	RGASKETX192(1)	RGASKETX452(2)	8	---	RGASKETX232(6)	10A3265X152(7)
2-1/2 x 1-1/2	3 x 1-1/2	RGASKETX262(3)	---				

1. Kit includes key 10, 12, 13. 27 or 51
2. Kit includes key 10, qty 2; 12; 13; 51
3. Kit includes key 10, 11, 12, 13, 14, 27 or 51
4. Kit includes key 10, 11, 12, 13, 20, 27 or 51
5. Kit includes key 10, 12, 13, 51
6. Kit includes key 10 and 13
7. Kit includes key 10, qty 2; and 13
8. See table below for gasket descriptions

Gasket Descriptions

KEY NUMBER	DESCRIPTION	MATERIAL FGM -198° to 593°C (-325° to 1100°F)
10[1]	Bonnet Gasket	Graphite/S31600
11	Cage Gasket	
13	Seat Ring or Liner Gasket	
14 or 20	Adapter Gasket	
12	Spiral-Wound Gasket	N06600/Graphite
27 or 51	Shim	S31600 (316 SST)

1. 2 req'd for 2-stage Cavitrol III cage.

Neither Emerson, Emerson Automation Solutions, nor any of their affiliated entities assumes responsibility for the selection, use or maintenance of any product. Responsibility for proper selection, use, and maintenance of any product remains solely with the purchaser and end user.

Fisher, easy-e, Cavitrol, ENVIRO-SEAL, WhisperFlo, and Whisper Trim are marks owned by one of the companies in the Emerson Automation Solutions business unit of Emerson Electric Co. Emerson Automation Solutions, Emerson, and the Emerson logo are trademarks and service marks of Emerson Electric Co. All other marks are the property of their respective owners.

The contents of this publication are presented for informational purposes only, and while every effort has been made to ensure their accuracy, they are not to be construed as warranties or guarantees, express or implied, regarding the products or services described herein or their use or applicability. All sales are governed by our terms and conditions, which are available upon request. We reserve the right to modify or improve the designs or specifications of such products at any time without notice.

Emerson Automation Solutions
Marshalltown, Iowa 50158 USA
Sorocaba, 18087 Brazil
Cernay 68700 France
Dubai, United Arab Emirates
Singapore 128461 Singapore

www.Fisher.com

© 1973, 2017 Fisher Controls International LLC. All rights reserved.