3 R 20
Issue 2/2000

R-SERIES SEGMENT VALVE WAFER R1 AND FLANGED R21

F I E L D C O N T R O L S

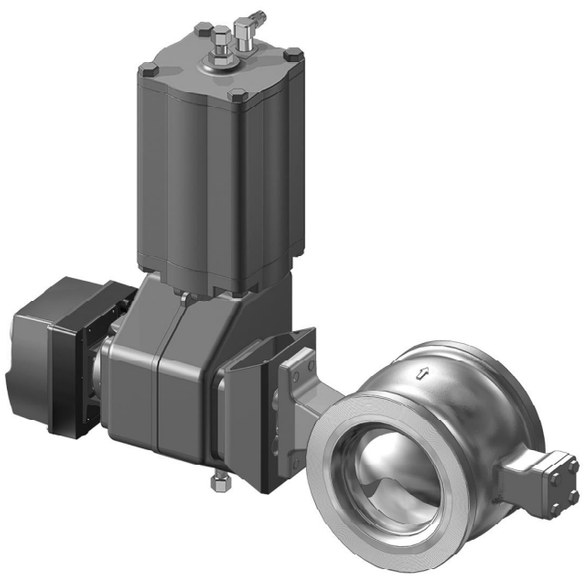

Neles Automation's R-Series rotary control valve is a segment ball valve that provides outstanding control performance in a quarter-turn valve design. It is offered with a variety of trim options to satisfy most control applications, from standard and low C_v trims for general applications to a Q-Trim™ noise/cavitation trim option for fighting aerodynamic noise in steam or gas and preventing cavitation in liquids.

FEATURES

Integral body construction

- Both flangeless and flanged R-Series valves feature one-piece body construction with no flange rings, inserts, or end caps to create potential leak paths.

Rugged, self-adjusting metal seat

- The size and durability of the R-Series segment valve seat is in a class by itself. Carefully engineered seat design assures that flow does not directly impinge on the seating surface, there by extending seat sealing life. Energized pressure seal design ensures correct contact between the seat and segment at all times. Seating capabilities are totally unaffected by pipeline forces, which assures more reliable valve operation.

Optional soft seat

- Soft seats are also available for R-Series valves. These seats extend the range of the R-Series to include applications where hard-chrome plating of the segment is not suitable, such as acids and other very low pH fluids. The design includes a carbon-filled PTFE seat inserted in a metal seat body of stainless steel or titanium. For more details refer to the Seat designs section of this bulletin.

Protected bearings

- Both trunnion bearings are located inside the valve body. Having the lower shaft bearing inside the body provides a larger bearing area, lower bearing loads, and longer bearing life. Locating the bearing outside of the flow stream further enhances performance.

Economical

- Low seat torque requirements combined with compact actuator designs result in a lower cost total package.

Low noise/Cavitation Q-Trim™ option

- Liquid cavitation and aerodynamic noise, which can be a problem at higher pressure drop ratios, are reduced with the patented Q-Trim™ option. This self-cleaning design handles contaminated flows (dirty steam, river water, black liquor, etc.) without plugging.

Reduced C_v trims

- The DN 25 / 1" size features five different segments (full area and four reduced trims). The reduced trims extend the valve's application range to low-flow high-accuracy services such as additive/coloring lines, pilot plants, etc.

Optional high-consistency slurry version

- This specially engineered valve is available to handle high consistency pulp stock (8%–19% consistency range) and other hard-to-handle non-abrasive slurries. The flow path is continuously increased within the valve to assure free flow of thick slurries.

Optional full titanium construction

- A full titanium segment valve is available in sizes DN 25 - 250 / 1" through 10". This is an excellent solution for controlling chlorinated high-consistency pulp stock, seawater, organic crystallizing acids, and other fluids requiring corrosion resistant alloys.

neles automation
A member of Metso Corporation

EXPLODED VIEW

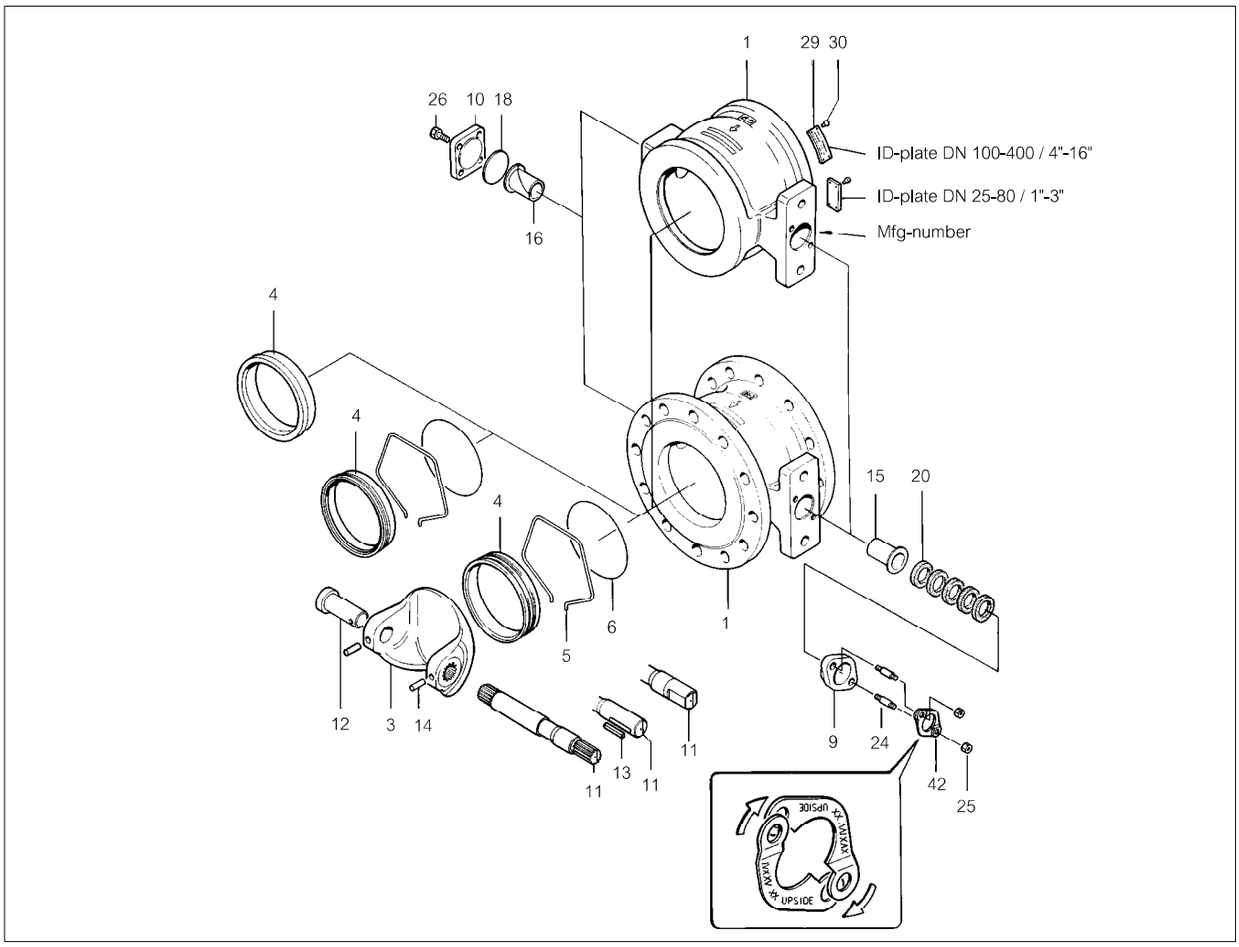

PARTS LIST

Part	Name	BODY MATERIAL		
		Stainless steel	**Carbon steel**	**Titanium**
1	Body	ASTM A351 gr. CF8M	ASTM A216 gr. WCB	ASTM B 367
3	Segment	SIS 2324 + chromium / SIS 2324 / AISI 329	SIS 2324 + chromium / SIS 2324 / AISI 329	ASTM B 367
4	Seat	Cobalt based alloy / PTFE 1)	Cobalt based alloy / PTFE 1)	ASTM B348 / PTFE 1)
5	Lock spring	INCONEL 625	INCONEL 625	ASTM B348
6	Back seal	SS + PTFE	SS + PTFE	TITANIUM + PTFE
9	Gland follower	ASTM A351 gr. CF8M	ASTM A351 gr. CF8M	ASTM B348
10	Blind flange	ASTM A351 gr. CF8M	ASTM A351 gr. CF8M	ASTM B348
11	Drive shaft	SIS 2324 / AISI 329	SIS 2324 / AISI 329	ASTM B348
12	Shaft	SIS 2324 / AISI 329	SIS 2324 / AISI 329	ASTM B348
13	Key	SIS 2324 / AISI 329	SIS 2324 / AISI 329	SIS 2324 / AISI 329
14	Cylindrical pin	SIS 2324 / AISI 329	SIS 2324 / AISI 329	ASTM B348
15	Bearing	PTFE + SS net	PTFE + SS net	PVDF
16	Bearing	PTFE + SS net	PTFE + SS net	PVDF
18	Sealing plate	Graphite	Graphite	PTFE
20	Packing	PTFE	PTFE	PTFE
24	Stud	ISO 3506 A4-80	ISO 3506 A4-80	ASTM B348
25	Hexagon nut	ISO 3506 A4-80	ISO 3506 A4-80	ASTM B348
26	Hexagon bolt	ISO 3506 A4-80	ISO 3506 A4-80	ASTM B348
29	Identification plate	AISI 304	AISI 304	AISI 304
42	Retainer plate	AISI 316L	AISI 316L	Hastelloy C-276

1) Alternative materials

TECHNICAL SPECIFICATIONS

Type

Reduced-bore quarter-turn valve
- R1 and R11 mounted between flanges
- R21 and R23 flanged

Pressure ratings

Body
DIN PN 40; ANSI 300
Trim
DIN PN 25; ANSI 150
(Note the pressure/temperature curve)

Sizes

DN 25, 40, 50, 65, 80, 100, 150, 200, 250, 300, 350, 400
Inch 1", 1 1/2", 2", 2 1/2", 3", 4", 6", 8", 10", 12", 14", 16"

Face-to-face dimensions

R1 special.
R11, R21 according to ISA S75.04 and IEC/DIN 534-3-2.
R23 according to ANSI B16.10 short pattern.

Temperature range

-40˚C ... +250˚C / -40…+480°F.

Inherent flow characteristic

Equal percentage.

Fire safety

R21 according to BS6755/API 607.

Tightness

Tightness is tested in the direction by the arrow, see page 4, according to ISO 5208. The standard tightness of a metal-seated segment valve is 10 x ISO 5208 Rate D. This tightness corresponds to 1/100 of max seat leakage allowed by ANSI/FCI 70.2 Class IV.

Valve pressure and leak test

All valves manufactured by Neles Automation undergo pressure testing. The test pressure of an R-series valve body is 1.5 x the pressure rating and the test pressure of a seat is 1.1 x the maximum permissible shut-off pressure. The test medium is water containing a corrosion inhibitor.

Maximum allowable leakage		
Size DN / inch	Metal seat	Soft seat
25 / 1	1.50 ml/min	0.15 ml/min
40 / 1 1/2	2.40 ml/min	0.24 ml/min
50 / 2	3.00 ml/min	0.30 ml/min
65 / 2 1/2	3.90 ml/min	0.39 ml/min
80 / 3	4.80 ml/min	0.48 ml/min
100 / 4	6.00 ml/min	0.60 ml/min
150 / 6	9.00 ml/min	0.90 ml/min
200 / 8	12.00 ml/min	1.20 ml/min
250 / 10	15.00 ml/min	1.50 ml/min
300 / 12	18.00 ml/min	1.80 ml/min
350 / 14	21.00 ml/min	2.10 ml/min
400 / 16	24.00 ml/min	2.40 ml/min

Valve body ratings

These are maximum working pressure ratings of the valve body only in accordance with ANSI B16.34. The maximum allowed throttling differential pressure chart below determines the differential pressure limitations according to specific service conditions.

Temperature °C / °F	Maximum valve body rating — bar / psi				
	ANSI Class 150		ANSI Class 300 and Wafer		Wafer
	Carbon Steel	Stainless Steel	Carbon Steel	Stainless Steel	Titanium
-30 to 27 / -20 to 100	19.7 / 285	19.0 / 275	51.0 / 740	49.7 / 720	36.5 / 530
93 / 200	17.9 / 260	16.6 / 240	46.6 / 675	42.8 / 620	30 / 435*
149 / 300	15.9 / 230	14.8 / 215	45.2 / 655	38.6 / 560	—
204 / 400	13.8 / 200	13.4 / 195	43.8 / 635	35.5 / 515	—
250 / 482	12.0 / 174	12.0 / 174	41.8 / 606	33.5 / 485	—

* Rating at 100°C / 212°F

Maximum throttling differential pressure for steel valves

Note! Noise and cavitation should also be taken into account when determining the maximum pressure differential of a valve.

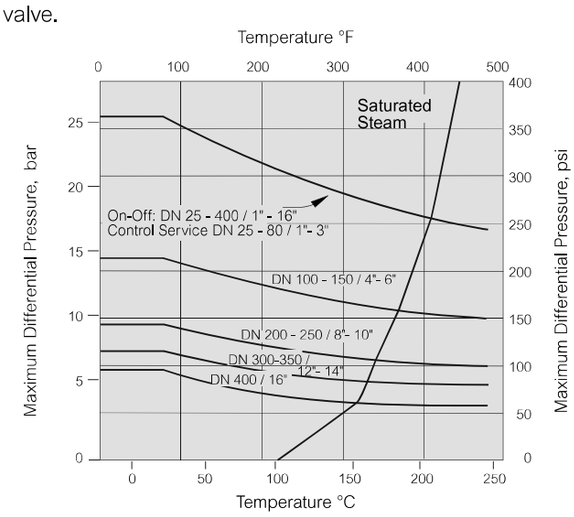

Max. differential pressure ratings of titanium standard valves

Note! The maximum shut-off pressure differential of titanium segment valves is 19 bar / 275 psi.

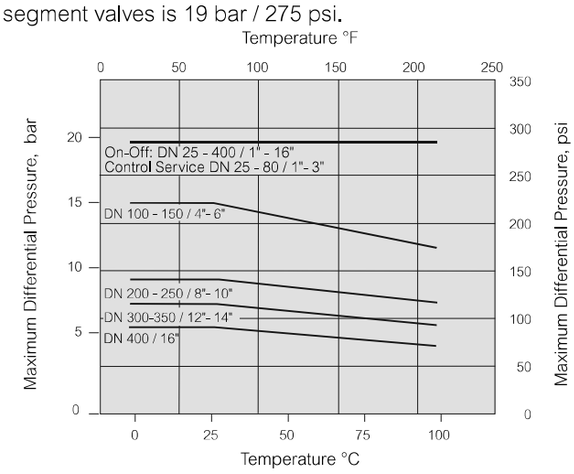

Maximum C_v and resistance coefficients for R-series valves

Valve size DN	Valve size inch	Metal-seated valve					Soft-seated valve	
		Standard valve		R2-S-valve		Q-R-valve	Standard valve	
		C_v 100%[1)]	ξ 100%[1)]	C_v 70°	ξ 70°	C_v 100%[2)]	C_v 100%[1)]	ξ 100%[1)]
25	1	45	0.41	–	–	–	21	1.83
40	1 1/2	110	0.45	–	–	–	61	1.47
50	2	180	0.41	–	–	47	110	1.10
65	2 1/2	280	0.49	–	–	96	215	0.83
80	3	420	0.50	125	5.5	160	340	0.76
100	4	620	0.56	200	5.1	250	520	0.79
150	6	1260	0.68	370	8.1	540	1070	0.94
200	8	2030	0.83	600	9.3	880	1760	1.10
250	10	3210	0.81	900	10.3	1510	2830	1.04
300	12	4490	0.86	–	–	2140	4080	1.04
350	14	6440	0.77	–	–	3160	5750	0.97
400	16	8510	0.76	–	–	4180	7630	0.94

1) 100% corresponds to a 95° turning angle
2) For Q-R-valves, 100% corresponds to a 90° turning angle

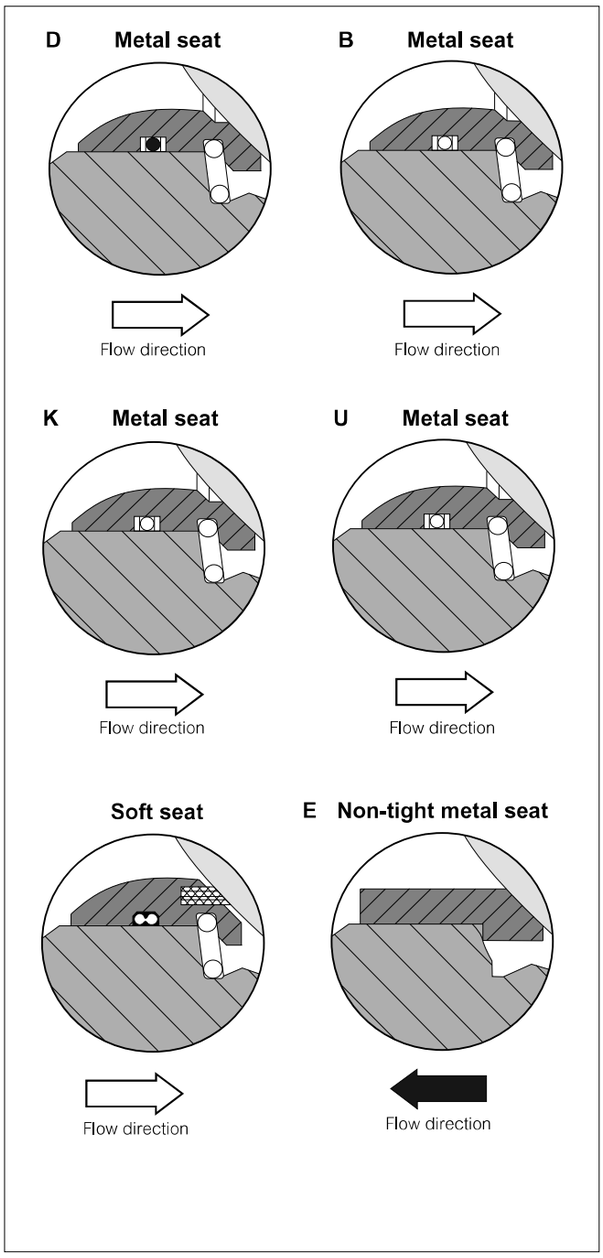

SEATS DESIGNS

D Metal seat

Seat:	Stainless steel + cobalt based hard facing
Spring:	Inconel 625
Seat seal:	PTFE coated Viton O-ring
Temp. Range:	-40 °C... +250 °C / - 40 °F ...+480 °F
Service:	Control, ANSI Class IV tight

B Metal seat

Seat:	317 SS + Cobalt based hard facing
Spring:	Inconel 625
Seat seal:	Filled PTFE lipseal / Elgiloy spring
Temp. Range:	-40 °C... +250 °C/ - 40 °F ...+480 °F
Service:	General service

K Metal seat

Seat:	316 SS + Cobalt based hard facing
Spring:	Inconel 625
Seat seal:	Filled PTFE lipseal / Elgiloy spring
Temp. Range:	-40 °C... +250 °C / - 40 °F ...+480 °F
Service:	General service

U Metal seat

Seat:	Titanium
Spring:	Titanium
Seat seal:	Virgin PTFE lipseal / Titanium spring
Temp. Range:	-40 °C... +120 °C / - 40 °F ...+250 °F
Service:	Specially for chloride applications except dry chlorine gas.

Soft seat (PTFE + C25%)

Code	Seat body	Spring	Seat seal	Back seal
T2	316 SS	Inconel 625	Filled PTFE	Elgiloy spring
T3	317 SS	Inconel 625	Filled PTFE	Elgiloy spring
T4	304 SS	Inconel 625	Filled PTFE	Elgiloy spring
T5	Titanium	Titanium	Virgin PTFE	Titan. spring
T6	Hastelloy	Inconel 625	Filled PTFE	Hastel. spring
T7	UNS S31254	Inconel 625	Virgin PTFE	Viton GF

Temperature range for T2, T3, T4: -40 °C... +250 °C / -40 °F ...+480 °F
Temperature range for T5, T6: -40 °C... +120 °C / -40 °F ...+250 °F
Temperature range for T7: -40 °C... +200 °C / -40 °F ...+390 °F

E Non-tight metal seat

Seat:	Cobalt based alloy
Temp. Range:	-40 °C... +250 °C / - 40 °F ...+480 °F
Service:	Extremely erosive applications, non-tight.
NOTE !	Flow direction arrow is reversed.

CONSTRUCTION OPTIONS

Low C_V trims

Reduced C_V trims are available on the 1" valve to control very low flows with high accuracy. The narrow orifice is a selfflushing design because the trim orifice is continually increasing. Excellent choice for additive applications.

Q-trim™ valve trim for cavitation/noise abatement

Liquid cavitation and aerodynamic noise problems can be solved with the patented Q-Trim™ valve trim. This design employs the two well-known principles of dividing the pressure drop into a series of small pressure drops and of separating the flow stream into many small jet streams. The use of these two principles combined with the rotation of the attenuator elements provides a matchless combination of cavitation/noise abatement with high rangeability, high capacity and capability to handle impure fluids.

High consistency slurry valve

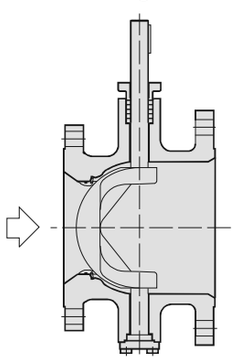

Available in 317 stainless steel or titanium, this version of the segment valve provides an optimized flowpath for nonbrasive slurry service. The flow path within the valve is continuously increased to eliminate restrictions where material may buildup, reducing flow resistance. Additionally, the body is equipped with a flushing connection and the valve outlet flange is one nominal size larger than the inlet. This valve is normally used in medium consistency (pulp) pump applications and is available in both stainless steel and titanium construction. Size range: 3" x 4", 4" x 6", 6" x 8", 8" x 10", and 10" x 12"

Erosion resistant version

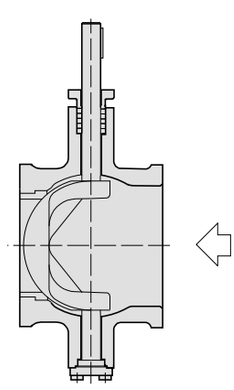

This heavy duty erosion resistant design handles contaminated flows and abrasive media like lime mud and kaolin at a favorable cost/useable life ratio. The seat is machined from cobalt chromium alloy and the seat design is changed from normal to reverse flow for maximum abrasion resistance. This version should not be used for isolation service since the seat is not in contact with the segment.

RECOMMENDED ACTUATOR SELECTION FOR THROTTLING CONTROL APPLICATIONS

The following tables show the recommended actuator size and recommended positioner selection for general throttling applications. Actuators are sized for 4.2 bar / 60 psi supply pressure.

For the recommended positioner tubing size refer IMO's 7 ND 70, 7 NE 72 & 7 NP 72.

B1C ACTUATORS

DN	Size	Max. throttling Δp		Actuator size	ND	NE	NP
		bar	psi				
25-80	1–3	25	362	B1CU6	822	724	723
100	4	15	215	B1CU9	822	724	723
150	6	15	215	B1CU9	826	724	723
200	8	7	100	B1CU9	826	724	723
200	8	10	145	B1CU11	826	724	723
250	10	7	100	B1CU11	826	724	723
250	10	10	145	B1CU13	826	724	724
300	12	8	115	B1CU13	826	724	724
350	14	8	115	B1CU17	826	724	724
400	16	6	90	B1CU17	826	724	724

B1J ACTUATORS

DN	Size	Max. throttling Δp		Actuator size	ND	NE	NP
		bar	psi				
25-80	1–3	25	362	B1JU8	8221	729	729
100	4	15	215	B1JU8	8221	729	729
150	6	15	215	B1JU10	8261	724	724
200	8	10	145	B1JU10	8261	724	724
250	10	10	145	B1JU12	8261	724	724
300	12	3	50	B1JU12	8261	724	724
300	12	8	115	B1JU16	8261	724	724
350	14	6	80	B1JU16	8261	724	724
350	14	8	115	B1JU20	8261	726	726
400	16	3	50	B1JU16	8261	724	724
400	16	6	90	B1JU20	8221	726	726

QUADRA POWR ACTUATORS

DN	Size	Max. throttling Δp		Actuator size	ND	NE	NP
		bar	psi				
25-50	1–2	25	362	QP1C	8221	729	729
80	3	7	100	QP1C	8221	729	729
80	3	25	362	QP2C	8221	729	729
100	4	7	100	QP2C	8221	729	729
100	4	15	215	QP3C	8261	724	724
150	6	15	215	QP3C	8261	724	724
200	8	7	100	QP3C	8261	724	724
200	8	10	145	QP4C	8261	724	724
250	10	7	100	QP4C	8261	724	724
250	10	10	145	QP5C	8261	726	726
300	12	7	100	QP5C	8221	726	726
350	14	7	100	QP5C	8261	726	726
400	16	6	90	QP5C	8261	726	726

CHART 1: R-SERIES VALVES
Torque chart for selecting actuators

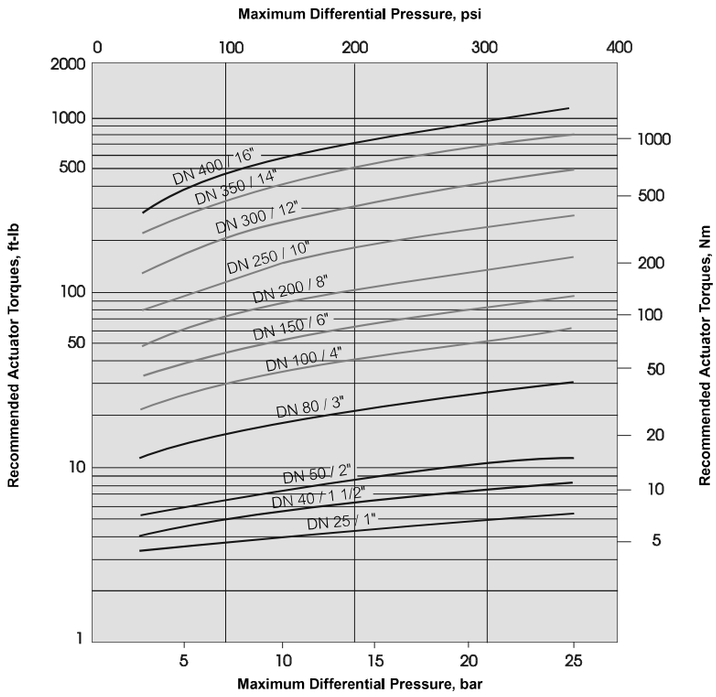

Use Torque Chart 1 to select actuators for on-off applications. To size an actuator for throttling control, multiply torque value by a factor of 1.3. Use pilot and tubing sizes equivalent to a similar size actuator shown in the page 5 table. Refer to the Actuator Selection tables on page 5 for throttling control applications.

Because control accuracy is influenced by many variables including valve torque, actuator output, positioner pilot size, and tubing diameter, the selection criteria shown on page 5 should be followed for any selected actuator. For detailed technical information on Neles Automation double-acting and spring-return actuators, refer to the following bulletins:

Quadra-Powr Spring-Diaphragm Actuators 6 QP 20.

B1C/B1J Double-Acting and Spring-Return Cylinder Actuators 6 B 20.

CHART 2: Q-TRIM VALVES
Torque chart for selecting actuators

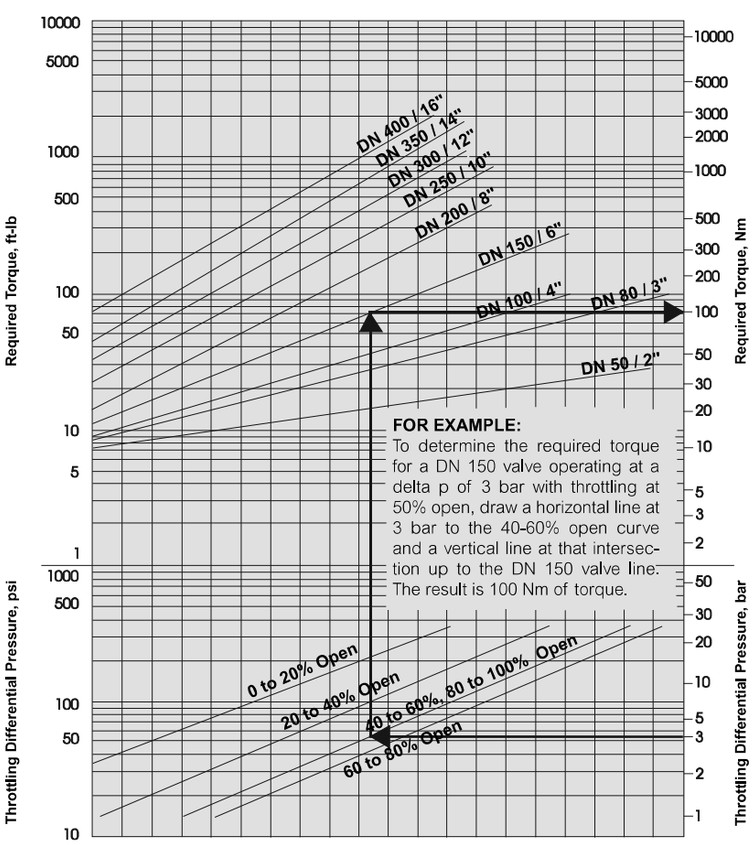

Maximum allowed stem torque

Valve Size DN / inches	Torque Nm / ft-lb
25 / 1	30 / 22
40 / 1.5	30 / 22
50 / 2	65 / 48
65 / 2.5	65 /48
80 / 3	160 / 118
100 / 4	160 / 118
150 / 6	490 / 362
200 / 8	675 / 498
250 / 10	1350 / 996
300 / 12	1900 / 1402
350 / 14	3000 / 2214
400 / 16	4200 / 3100

DIMENSIONS

R1/R11

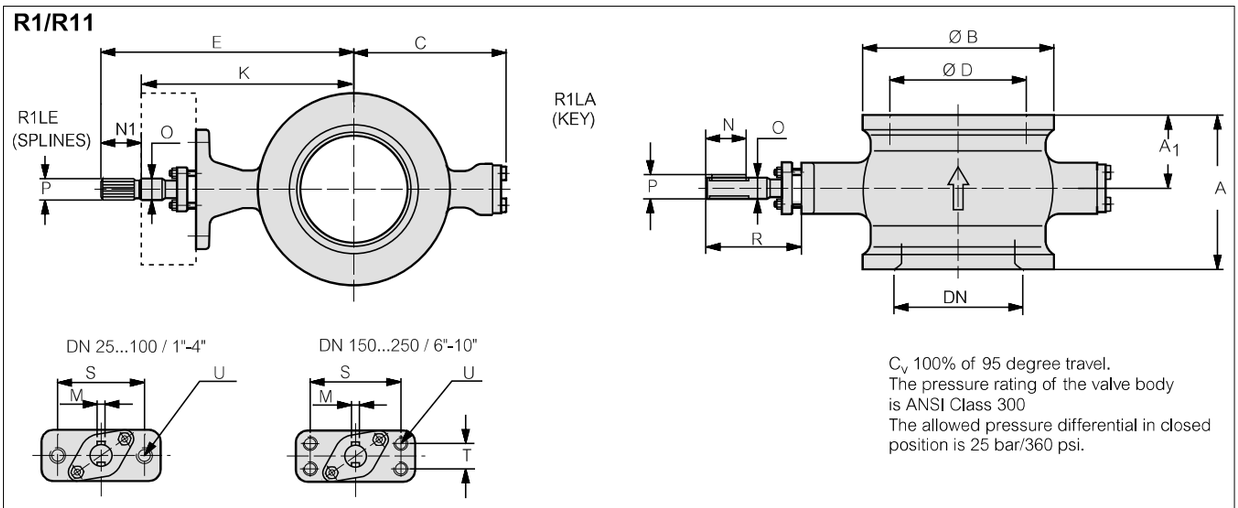

C_v 100% of 95 degree travel.
The pressure rating of the valve body is ANSI Class 300
The allowed pressure differential in closed position is 25 bar/360 psi.

R1/R11

DN	MAIN DIMENSIONS, mm												SHAFT DIMENSIONS, mm												
	D	R1		R11							R1	R11	R1/R11LA (KEY)								R1/R11LE (SPLINES)				
		A	A1	A	A1	B	C	S	T	U UNC	kg	kg	O	E	R	K	M	P	N	DI	E	R	K	N1	P1/DIN5480
25	33 / 38*	50	25	102	51	64	57	70	-	3/8	2,5	3,3	15	144	70	119	4.76	17	25	15	175	100	120	20	W14x1x12
40	49	60	25	114	57	82	63	70	-	3/8	3,5	5,1	15	151	71	125	4.76	17	25	15	181	101	125	20	W14x1x12
50	60	75	32	124	62	100	92	70	-	3/8	5	7,3	15	170	70	145	4.76	17	25	15	200	100	145	20	W14x1x12
65	73	100	50			118	99	70	-	3/8	8		15	175	70	150	4.76	17	25	15	206	101	150	20	W14x1x12
80	89	100	45	165	83	131	108	90	-	1/2	9	13,4	20	196	79	162	4.76	22.2	35	20	227	110	162	20	W14x1x12
100	113	115	50	194	97	158	117	90	-	1/2	11	17	20	205	80	170	4.76	22.2	35	20	236	111	170	20	W18x1x16
150	164	160	65	229	115	216	177	110	32	1/2	26	35	25	295	110	255	6.35	27.8	46	25	300	115	250	25	W25x1x24
200	205	200	80	243	122	268	200	130	32	1/2	48	55	25/30	346	140	286	6.35	27.8	46	30	341	135	285	25	W25x1x24
250	259	240	92	297	149	326	252	130	32	1/2	78	92	35	390	141	329	9.52	39.1	58	35	396	146	330	35	W34x1x32

SIZE	MAIN DIMENSIONS, inch												SHAFT DIMENSIONS, inch												
	D	R1		R11							R1	R11	R1/R11LA (KEY)								R1/R11LE (SPLINES)				
		A	A1	A	A1	B	C	S	T	U UNC	lbs	lbs	O	E	R	K	M	P	N	DI	E	R	K	N1	P1/DIN5480
1	1.30 / 1.49*	1.97	0.98	4.02	2.01	2.52	2.24	2.76	-	3/8	6	7	0.59	5.67	2.76	4.69	0.19	0.67	0.98	0.59	6.89	3.94	4.72	0.79	W14x1x12
1.5	1.93	2.36	0.98	4.49	2.24	3.23	2.48	2.76	-	3/8	8	11	0.59	5.94	2.80	4.92	0.19	0.67	0.98	0.59	7.13	3.98	4.92	0.79	W14x1x12
2	2.36	2.95	1.26	4.88	2.44	3.94	3.62	2.76	-	3/8	11	16	0.59	6.69	2.76	5.71	0.19	0.67	0.98	0.59	7.87	3.94	5.71	0.79	W14x1x12
2.5	2.87	3.94	1.97			4.65	3.90	2.76	-	3/8	18		0.59	6.89	2.76	5.91	0.19	0.67	0.98	0.59	8.11	3.98	5.91	0.79	W14x1x12
3	3.50	3.94	1.77	6.50	3.27	5.16	4.25	3.54	-	1/2	20	29	0.79	7.72	3.11	6.38	0.19	0.87	1.38	0.79	8.94	4.33	6.38	0.79	W14x1x12
4	4.45	4.53	1.97	7.64	3.82	6.22	4.61	3.54	-	1/2	24	37	0.79	8.07	3.15	6.69	0.19	0.87	1.38	0.79	9.29	4.37	6.69	0.79	W18x1x16
6	6.46	6.30	2.56	9.02	4.53	8.50	6.97	4.33	1.26	1/2	57	77	0.98	11.61	4.33	10.04	0.25	1.09	1.81	0.98	11.81	4.53	9.84	0.98	W25x1x24
8	8.07	7.87	3.15	9.57	4.80	10.55	7.87	5.12	1.26	1/2	106	121	0.98/ 1.18	13.62	5.51	11.26	0.25	1.09	1.81	1.18	13.43	5.31	11.22	0.98	W25x1x24
10	10.20	9.45	3.62	11.69	5.87	12.83	9.92	5.12	1.26	1/2	172	202	1.38	15.35	5.55	12.95	0.37	1.54	2.28	1.38	15.59	5.75	12.99	1.38	W34x1x32

* Low capacity segment max Cv 0.5, 1.5 or 15

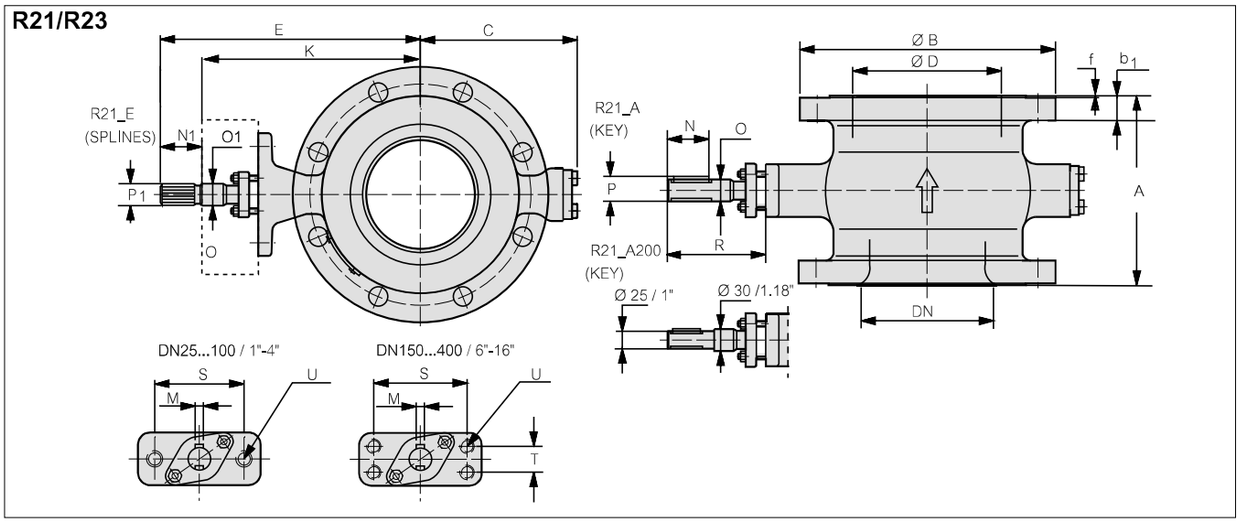

R21/R23

DN	MAIN DIMESIONS, mm								SHAFT DIMESIONS, mm													FLANGE DIMESIONS, mm									
		R21	R23C	R23D				U UNC	R21/R23_A (KEY)							R21/R23_E (SPLINES)						R21/R23C ANSI 150					R21/R23D ANSI 300				
	D	A	A	A	C	S	T		O	E	R	K	M	P	N	O1	E	R	K	N1	P1/DIN5480	B	b1	f	R21C kg	R23C kg	B	b1	f	R21D kg	R23D kg
25	33/38*	102			57	70	–	3/8	15	144	70	119	4.76	17	25	15	175	100	120	20	W14x1x12	108	14.5	1.6	3.5		124	17.5	1.6	5	
40	49	114			63	70	–	3/8	15	151	71	125	4.76	17	25	15	181	101	125	20	W14x1x12	127	14.5	1.6	5		156	21	1.6	8	
50	60	124	178	216	92	70	–	3/8	15	170	70	145	4.76	17	25	15	200	100	145	20	W14x1x12	152	16	1.6	8	17	165	22.5	1.6	10	24
65	73	145			99	70	–	3/8	15	175	70	150	4.76	17	25	15	206	101	150	20	W14x1x12	178	17.5	1.6	11		191	25.5	1.6	14	
80	89	165	208	282	108	90	–	1/2	20	196	79	162	4.76	22.2	35	20	227	110	162	20	W14x1x12	191	19.5	1.6	15	25	210	29	1.6	20	36
100	113	194	224	305	117	90	–	1/2	20	205	80	170	4.76	22.2	35	20	236	111	170	20	W18x1x16	229	24	1.6	23	35	254	32	1.6	31	50
150	164	229	267	403	177	110	32	1/2	25	295	110	255	6.35	27.8	46	25	300	115	255	25	W25x1x24	279	25.5	1.6	45	77	318	37	1.6	60	100
200	205	243	298	419	200	130	32	1/2	25/30	346	140	286	6.35	27.8	46	30	341	135	286	30	W25x1x24	343	29	1.6	70	107	381	41.5	1.6	95	150
250	259	297			252	130	32	1/2	35	390	140	329	9.52	39.1	58	35	396	146	330	35	W34x1x32	406	30.5	1.6	105		445	48	1.6	140	
300	300	338			270	160	40	5/8	40	462	165	387	9.52	44.2	68	40	452	155	387	35	W34x1x32	483	32	1.6	155		520	51	1.6	205	
350	350	400			310	160	40	5/8	45	478	165	403	12.7	50.4	80	45	468	155	403	35	W34x1x32	534	35	1.6	210		584	54	1.6	280	
400	400	400			355	160	55	3/4	50	532	178	454	12.7	55.5	90	50	529	175	454	35	W34x1x32	597	37	1.6	290		648	57	1.6	380	

SIZE	MAIN DIMESIONS, inch								SHAFT DIMESIONS, inch													FLANGE DIMESIONS, inch									
		R21	R23C	R23D				U UNC	R21/R23_A (KEY)							R21/R23_E (SPLINES)						R21/R23C ANSI 150					R21/R23D ANSI 300				
	D	A	A	A	C	S	T		O	E	R	K	M	P	N	O1	E	R	K	N1	P1/DIN5480	B	b1	f	R21C lbs	R23C lbs	B	b1	f	R21D lbs	R23D lbs
1	1.30/ 1.49*	4.02			2.24	2.76	–	3/8	0.59	5.67	2.76	4.69	0.19	0.67	0.98	0.59	6.89	3.94	4.72	0.79	W14x1x12	4.25	0.57	0.06	8		4.88	0.69	0.06	11	
1.5	1.93	4.49			2.48	2.76	–	3/8	0.59	5.94	2.80	4.92	0.19	0.67	0.98	0.59	7.13	3.98	4.92	0.79	W14x1x12	5.00	0.57	0.06	11		6.14	0.83	0.06	18	
2	2.36	4.88	7.01	8.50	3.62	2.76	–	3/8	0.59	6.69	2.76	5.71	0.19	0.67	0.98	0.59	7.87	3.94	5.71	0.79	W14x1x12	5.98	0.63	0.06	18	37	6.50	0.89	0.06	22	53
2.5	2.87	5.71			3.90	2.76	–	3/8	0.59	6.89	2.76	5.91	0.19	0.67	0.98	0.59	8.11	3.98	5.91	0.79	W14x1x12	7.01	0.69	0.06	24		7.52	1.00	0.06	31	
3	3.50	6.50	8.19	11.10	4.25	3.54	–	1/2	0.79	7.72	3.11	6.38	0.19	0.87	1.38	0.79	8.94	4.33	6.38	0.79	W14x1x12	7.52	0.77	0.06	33	55	8.27	1.14	0.06	44	79
4	4.45	7.64	8.82	12.01	4.61	3.54	–	1/2	0.79	8.07	3.15	6.69	0.19	0.87	1.38	0.79	9.29	4.37	6.69	0.79	W18x1x16	9.02	0.94	0.06	51	77	10.00	1.26	0.06	68	110
6	6.46	9.02	10.51	15.87	6.97	4.33	1.26	1/2	0.98	11.61	4.33	10.04	0.25	1.09	1.81	0.98	11.81	4.53	10.04	0.98	W25x1x24	10.98	1.00	0.06	99	169	12.52	1.46	0.06	132	220
8	8.07	9.57	11.73	16.50	7.87	5.12	1.26	1/2	0.89/ 1.18*	13.62	5.51	11.26	0.25	1.09	1.81	1.18	13.43	5.31	11.26	1.18	W25x1x24	13.50	1.14	0.06	154	235	15.00	1.63	0.06	209	330
10	10.20	11.69			9.92	5.12	1.26	1/2	1.38	15.35	5.51	12.95	0.37	1.54	2.28	1.38	15.59	5.75	12.99	1.38	W34x1x32	15.98	1.20	0.06	231		17.52	1.89	0.06	308	
12	11.81	13.31			10.63	6.30	1.57	5/8	1.57	18.19	6.50	15.24	0.37	1.74	2.68	1.57	17.80	6.10	15.24	1.38	W34x1x32	19.02	1.26	0.06	341		20.47	2.01	0.06	451	
14	13.78	15.75			12.20	6.30	1.57	5/8	1.77	18.82	6.50	15.87	0.50	1.98	3.15	1.77	18.43	6.10	15.87	1.38	W34x1x32	21.02	1.38	0.06	462		22.99	2.13	0.06	616	
16	15.75	15.75			13.98	6.30	2.17	3/4	1.97	20.94	7.01	17.87	0.50	2.19	3.54	1.97	20.83	6.89	17.87	1.38	W34x1x32	23.50	1.46	0.06	638		25.51	2.24	0.06	836	

DN	FLANGE DIMESIONS. mm															
	R21J PN 10				R21K PN 16				R21L PN 25				R21M PN 40			
	B	b1	f	kg	B	b1	f	kg	B	b1	f	kg	B	b1	f	kg
25	115	18	2	4.5	115	18	2	4.5	115	18	2	4.5	115	18	2	4.5
40	150	18	3	7	150	18	3	7	150	18	3	7	150	18	3	7
50	165	20	3	10	165	20	3	10	165	20	3	10	165	20	3	10
65	185	18	3	12	185	18	3	12	185	22	3	13	185	22	3	13
80	200	20	3	16	200	20	3	16	200	24	3	17	200	24	3	17
100	220	20	3	21	220	20	3	21	235	24	3	24	235	24	3	24
150	285	22	3	45	285	22	3	45	300	28	3	50	300	28	3	50
200	340	24	3	65	340	24	3	65	360	30	3	75	375	34	3	85
250	395	26	3	100	405	26	3	105	425	32	3	115	450	38	3	130
300	445	26	4	135	460	28	4	145	485	34	4	160	515	42	4	185
350	505	26	4	185	520	30	4	195	555	38	4	225	580	46	4	260
400	565	26	4	250	580	32	4	270	620	40	4	310	660	50	4	370

SIZE	FLANGE DIMESIONS, inch															
	R21J PN 10				R21K PN 16				R21L PN 25				R21M PN 40			
	B	b1	f	lbs	B	b1	f	lbs	B	b1	f	lbs	B	b1	f	lbs
1	4.53	0.71	0.08	10	4.53	0.71	0.08	10	4.53	0.71	0.08	10	4.53	0.71	0.08	10
1.5	5.91	0.71	0.12	15	5.91	0.71	0.12	15	5.91	0.71	0.12	15	5.91	0.71	0.12	15
2	6.50	0.79	0.12	22	6.50	0.79	0.12	22	6.50	0.79	0.12	22	6.50	0.79	0.12	22
2.5	7.28	0.71	0.12	26	7.28	0.71	0.12	26	7.28	0.87	0.12	29	7.28	0.87	0.12	29
3	7.87	0.79	0.12	35	7.87	0.79	0.12	35	7.87	0.94	0.12	37	7.87	0.94	0.12	37
4	8.66	0.79	0.12	46	8.66	0.79	0.12	46	9.25	0.94	0.12	53	9.25	0.94	0.12	53
6	11.22	0.87	0.12	99	11.22	0.87	0.12	99	11.81	1.10	0.12	110	11.81	1.10	0.12	110
8	13.39	0.94	0.12	143	13.39	0.94	0.12	143	14.17	1.18	0.12	165	14.76	1.34	0.12	187
10	15.55	1.02	0.12	220	15.94	1.02	0.12	231	16.73	1.26	0.12	253	17.72	1.50	0.12	286
12	17.52	1.02	0.16	297	18.11	1.10	0.16	319	19.09	1.34	0.16	352	20.28	1.65	0.16	407
14	19.88	1.02	0.16	407	20.47	1.18	0.16	429	21.85	1.50	0.16	495	22.83	1.81	0.16	572
16	22.24	1.02	0.16	550	22.83	1.26	0.16	594	24.41	1.57	0.16	682	25.98	1.97	0.16	814

DN	FLANGE DIMENSIONS, mm											
	R21R JIS 10K				R21S JIS 16K				R21T JIS 20K			
	B	b1	f	kg	B	b1	f	kg	B	b1	f	kg
25	125	14	1	5	125	14	1	5	125	16	1	5
40	140	16	2	6	140	16	2	6	140	18	2	7
50	155	16	2	8	155	16	2	8	155	18	2	8
65	175	18	2	10	175	18	2	10	175	20	2	12
80	185	18	2	14	200	20	2	14	200	22	2	16
100	210	18	2	19	225	22	2	22	225	24	2	23
150	280	22	2	40	305	24	2	45	305	28	2	50
200	330	22	2	65	350	26	2	70	350	30	2	75
250	400	24	2	100	430	28	2	110	430	34	2	120
300	445	24	3	135	480	30	3	150	480	36	3	160

SIZE	FLANGE DIMENSIONS, inch											
	R21R JIS 10K				R21S JIS 16K				R21T JIS 20K			
	B	b1	f	lbs	B	b1	f	lbs	B	b1	f	lbs
1	4.92	0.55	0.04	11	4.92	0.55	0.04	11	4.92	0.63	0.04	11
1.5	5.51	0.63	0.08	13	5.51	0.63	0.08	13	5.51	0.71	0.08	15
2	6.10	0.63	0.08	18	6.10	0.63	0.08	18	6.10	0.71	0.08	18
2.5	6.89	0.71	0.08	22	6.89	0.71	0.08	22	6.89	0.79	0.08	26
3	7.28	0.71	0.08	31	7.87	0.79	0.08	31	7.87	0.87	0.08	35
4	8.27	0.71	0.08	42	8.86	0.87	0.08	48	8.86	0.94	0.08	51
6	11.02	0.87	0.08	88	12.01	0.94	0.08	99	12.01	1.10	0.08	110
8	12.99	0.87	0.08	143	13.78	1.02	0.08	154	13.78	1.18	0.08	165
10	15.75	0.94	0.08	220	16.93	1.10	0.08	242	16.93	1.34	0.08	264
12	17.52	0.94	0.12	297	18.90	1.18	0.12	330	18.90	1.42	0.12	352

*Low capacity segment: Max C_V 0.5, 1.5, 5 or 15
C_V 100% of 95 degree travel. The allowed pressure differential in closed position is 25 bar / 370 psi.

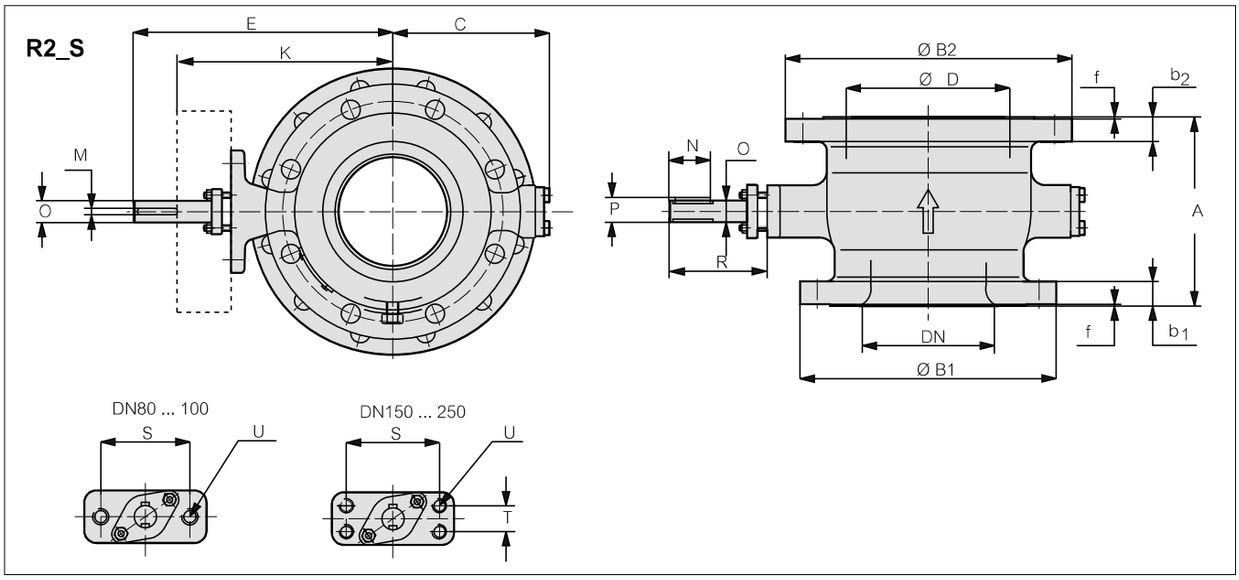

SIZE	MAIN DIMENSIONS, mm													U UNC	Plug NPTF
	DN	D	A	C	E	K	S	T	O	R	M	P	N		
80/100	80	102	165	108	196	162	90	-	20	79	4.8	22.2	35	1/2	1/2
100/150	100	136	163	117	205	170	90	-	20	80	4.8	22.2	35	1/2	1/2
150/200	150	190	207	177	295	255	110	32	25	110	6.4	27.8	46	1/2	1/2
200/250	200	240	248	200	346	286	130	32	25	140	6.4	27.8	46	1/2	3/4
250/300	250	296	297	250	390	329	130	32	35	141	9.5	39.1	58	1/2	3/4

SIZE	MAIN DIMENSIONS, inch													U UNC	Plug NPTF
	DN	D	A	C	E	K	S	T	O	R	M	P	N		
3/4	3	4.02	6.50	4.25	7.72	6.38	3.54	-	0.79	3.11	0.19	0.87	1.38	1/2	1/2
4/6	4	5.35	6.42	4.61	8.07	6.69	3.54	-	0.79	3.15	0.19	0.87	1.38	1/2	1/2
6/8	6	7.48	8.15	6.97	11.61	10.04	4.33	1.26	0.98	4.33	0.25	1.09	1.81	1/2	1/2
8/10	8	9.45	9.76	7.87	13.62	11.26	5.12	1.26	0.98	5.51	0.25	1.09	1.81	1/2	3/4
10/12	10	11.65	11.69	9.84	15.35	12.95	5.12	1.26	1.38	5.55	0.37	1.54	2.28	1/2	3/4

SIZE	FLANGE DIMENSIONS, mm																							
	R2JS PN 10						R2KS PN 16						R2LS PN 25						R2CS ANSI 150					
	B1	b	B2	b2	F	kg	B1	b	B2	b2	F	kg	B1	b	B2	b2	F	kg	B1	b	B2	b2	F	kg
80/100	200	20	220	20	3	16	200	20	220	20	3	16	200	24	235	24	3	18	191	19.5	229	24.0	1.6	17
100/150	220	20	285	22	3	24	220	20	285	22	3	24	235	24	300	28	3	30	229	24.0	279	25.5	1.6	27
150/200	285	22	340	24	3	43	285	22	340	24	3	43	300	28	360	30	3	52	279	25.5	343	29.0	1.6	46
200/250	340	24	395	26	3	68	340	24	405	26	3	69	360	30	425	32	3	80	343	26.0	406	30.5	1.6	74
250/300	395	26	445	26	3	98	405	26	460	28	3	100	425	32	485	34	3	110	406	30.6	483	32.0	1.6	105

SIZE	FLANGE DIMENSIONS, inch																							
	R2JS PN 10						R2KS PN 16						R2LS PN 25						R2CS ANSI 150					
	B1	b	B2	b2	F	lbs	B1	b	B2	b2	F	lbs	B1	b	B2	b2	F	lbs	B1	b	B2	b2	F	lbs
3/4	7.87	0.79	8.66	0.79	0.12	35	7.87	0.79	8.66	0.79	0.12	35	7.87	0.94	9.25	0.94	0.12	40	7.52	0.77	9.02	0.94	0.06	37
4/6	8.66	0.79	11.22	0.87	0.12	53	8.66	0.79	11.22	0.87	0.12	53	9.25	0.94	11.81	1.10	0.12	66	9.02	0.94	10.98	1.00	0.06	59
6/8	11.22	0.87	13.39	0.94	0.12	95	11.22	0.87	13.39	0.94	0.12	95	11.81	1.10	14.17	1.18	0.12	114	10.98	1.00	13.50	1.14	0.06	101
8/10	13.39	0.94	15.55	1.02	0.12	150	13.39	0.94	15.94	1.02	0.12	152	14.17	1.18	16.73	1.26	0.12	176	13.50	1.02	15.98	1.20	0.06	163
10/12	15.55	1.02	17.52	1.02	0.12	216	15.94	1.02	18.11	1.10	0.12	220	16.73	1.26	19.09	1.34	0.12	242	15.98	1.20	19.02	1.26	0.06	231

SIZE	FLANGE DIMENSIONS, mm					
	R2RS JIS 10 K					
	B1	b1	B2	b2	f	kg
80/100	185	18	210	18	2	14
100/150	210	18	280	22	2	23
150/200	280	22	330	22	2	41
200/250	330	22	400	24	2	65
250/300	400	24	445	24	2	98

SIZE	FLANGE DIMENSIONS, inch					
	R2RS JIS 10 K					
	B1	b1	B2	b2	f	lbs
3/4	7.28	0.71	8.27	0.71	0.08	31
4/6	8.27	0.71	11.02	0.87	0.08	51
6/8	11.02	0.87	12.99	0.87	0.08	90
8/10	12.99	0.87	15.75	0.94	0.08	143
10/12	15.75	0.94	17.52	0.94	0.08	216

VALVE + B1C, B1J, B1JA

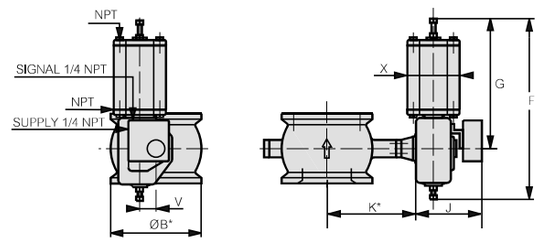

* See dimensions K and ØB from tables on pages 8, 9, 10 and 11.

VALVE + QPII

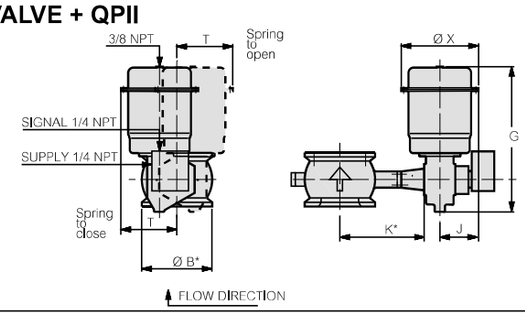

* See dimensions K and ØB from tables on pages 8, 9, 10 and 11.

Type	DIMESIONS IN mm					NPT	kg
	X	G	F	V	J		
B1C6	90	260	400	36	283	1/4	4.2
B1C9	110	315	455	43	279	1/4	9.6
B1C11	135	375	540	51	290	3/8	16
B1C13	175	445	635	65	316	3/8	31
B1C17	215	545	770	78	351	1/2	54
B1C20	215	575	840	97	385	1/2	73
B1C25	265	710	1040	121	448	1/2	131
B1C32	395	910	1330	153	525	3/4	256
B1C40	505	1150	1660	194	595	3/4	446
B1C50	610	1350	1970	242	690	1	830

Type	DIMESIONS IN inch					NPT	lbs
	X	G	F	V	J		
B1C6	3.54	10.24	15.75	1.42	11.14	1/4	9
B1C9	4.33	12.40	17.91	1.69	10.98	1/4	21
B1C11	5.31	14.76	21.26	2.01	11.42	3/8	35
B1C13	6.89	17.52	25.00	2.56	12.44	3/8	68
B1C17	8.46	21.46	30.31	3.07	13.82	1/2	119
B1C20	8.46	22.64	33.07	3.82	15.16	1/2	161
B1C25	10.43	27.95	40.94	4.76	17.64	1/2	289
B1C32	15.55	35.83	52.36	6.02	20.67	3/4	564
B1C40	19.88	45.28	65.35	7.64	23.43	3/4	983
B1C50	24.02	53.15	77.56	9.53	27.17	1	1829

Type	DIMESIONS IN mm					NPT	kg
	X	G	F	V	J		
B1J, B1JA8	135	420	560	43	279	3/8	17
B1J, B1JA10	175	490	650	51	290	3/8	30
B1J, B1JA12	215	620	800	65	316	1/2	57
B1J, B1JA16	265	760	990	78	351	1/2	100
B1J, B1JA20	395	935	1200	97	358	3/4	175
B1J, B1JA25	505	1200	1530	121	448	3/4	350
B1J, B1JA32	540	1410	1830	153	525	1	671

Type	DIMESIONS IN inch					NPT	lbs
	X	G	F	V	J		
B1J, B1JA8	5.31	16.54	22.05	1.69	10.98	3/8	37
B1J, B1JA10	6.89	19.29	25.59	2.01	11.42	3/8	66
B1J, B1JA12	8.46	24.41	31.50	2.56	12.44	1/2	126
B1J, B1JA16	10.43	29.92	38.98	3.07	13.82	1/2	220
B1J, B1JA20	15.55	36.81	47.24	3.82	14.09	3/4	386
B1J, B1JA25	19.88	47.24	60.24	4.76	17.64	3/4	771
B1J, B1JA32	21.26	55.51	72.05	6.02	20.67	1	1479

TYPE	DIMESIONS IN mm				kg
	X	G	J	T	
QP1	213	332	149	142	11
QP2	228	430	166	156	19
QP3	274	515	193	190	33
QP4	320	585	222	228	53
QP5	382	718	268	276	107

TYPE	DIMESIONS IN inch				lbs
	X	G	J	T	
QP1	8.39	13.07	5.87	5.59	24
QP2	8.98	16.93	6.54	6.14	42
QP3	10.79	20.28	7.60	7.48	73
QP4	12.60	23.03	8.74	8.98	117
QP5	15.04	28.27	10.55	10.87	235

ACTUATOR MOUNTING POSITIONS

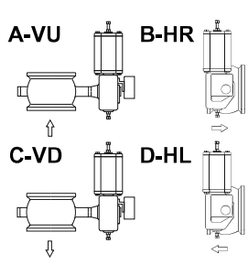

Note!

1. All mounting positions are possible. The most common positions are shown here. Should you wish to use some other mounting position, please contact the nearest Neles Automation representative.
2. The mounting position can be changed at the site without extra accessories. See bulletin 3 R1L 71 for mounting, operation and maintenance.
3. If no mounting position is given, the actuator is mounted at the factory in position A-VU.

HOW TO ORDER

Example:

	R2	1	L	A	300	A	J	J	K	F	
1.	2.	3.	4.	5.	6.	7	8.	9.	10.	11.	12.

1.	Q-trim or low-capacity C_V
–	Standard capacity C_V or without a Q-trim
Q	Noise/cavitation attenuator DN 50 - 400 / 2" - 16"
C005	Maximum C_V = 0.5 DN 25 / 1"
C015	Maximum C_V = 1.5 DN 25 / 1"
C05	Maximum C_V = 5 DN 25 / 1"
C15	Maximum C_V = 15 DN 25 / 1"

2.	Product series
R1	Flangeless, reduced bore
R2	Flanged, reduced bore

3.	Face-to-face dimension
-	Neles Automation dimension
1	ISA S75.04 and DIN IEC 534-3-2
3	ANSI B16.10 short pattern

4.	Pressure rating
J	PN 10, flanged R21
K	PN 16, flanged R21
L	PN 25, flanged R21; flangeless R1, R11
M	PN 40, flanged R21
C	ANSI 150, flanged R21
D	ANSI 300, flanged R21
R	JIS 10 K, flanged R21
S	JIS 16 K, flanged R21
T	JIS 20 K, flanged R21

5.	Construction
A	Standard, drive shaft with keyway
E	Standard, drive shaft with splines for QP II
S	High-consistency version, drive shaft with keyway
P	High consistency version, drive shaft with splines

6.	Size
	025, 040, 050, 065, 080, 100, 150, 200, 250, 300*, 350,* 400* 01, 1H, 02, 2H, 03, 04, 06, 08, 10, 12*, 14*, 16* *) only flanged

7.	Body	Screws
A	CF8M (AISI 316)	A4-80 / B8M
C	CG8M (AISI 317)	A4-80 / B8M
D	WCB	A4-80 / B8M
H	Hastelloy C®	Hastelloy
K	W. no. 1.4408	A4-80 / B8M
L	W. no. 1.4308 / 1.4306	A4-80 / B8M
R	W. no. 1.0619	A4-80 / B8M
T	Titanium	Titanium

8.	Segment
J	SIS 2324 (AISI 329) + hard chrome plating
H	Hastelloy C®
C	CG8M (AISI 317) + hard chrome plating
K	W. no. 1.4408 + hard chrome plating
L	W. no 1.4308 / 1.4306 + hard chrome plating
T	Titanium + ceramic coating
R	CG8M (AISI 317)
S	SIS 2324 (AISI 329)

9.	Shafts, pins / bearings
J	SIS 2324 (AISI 329) / PTFE
H	Hastelloy C® / PVDF
T	Titanium / PVDF
N	Nitronic 50 / PTFE

10.	Seat
K	316 + Cobalt based hard facing, back seal PTFE lip seal
E	Cobalt based alloy, erosion-resistant version, non-tight
U	Titanium, back seal PTFE lip seal
T	PTFE + C25% / metal body
D	AISI 316 + Cobalt based hard facing, PTFE, Control Service

11.	Other parts
F	Graphite gland packing
V	V-ring packing (PTFE)

12.	Special flange facing
	Contact the nearest Neles Automation sales office

Subject to change without prior notice.

Neles Automation, Field Controls Division

Europe, Levytie 6, P.O.Box 310, 00811 Helsinki, Finland. Tel.int +358 20 483 150. Fax int. +358 20 483 151

North America, 4300 Windfern, Houston, TX 77041, USA, Tel. int +1-832-590-5000, Fax. int. +1-832-590-5060
3100 Medlock Bridge Road, Suite 250, Norcross, GA 30071, USA Tel. int. + 1 770 446 7818 Fax int. + 1 770 242 8386

Asia Pacific, 501 Orchard Road, #05-09 Wheelock Place, 238880 Singapore. Tel. int. +65 735 5200. Fax int. +65 735 4566

Other sales offices (int. telephone numbers):

Australia: +61-3-9894 7922, Austria: +43-1-795 520, Belgium: +32-2-461 0227, Brazil: +55-123-401 000, Canada: +1-514-630 6998, Chile: +56-2-233 9743, China: +86-21-6295 3410, Czech Republic: +420-2-613 173 60, France: +33-3-89-506 400, Germany: +49-2206-60 040, Indonesia: +62 21 848 0138, Italy: +39-02-254 5137, Japan: +81-3-3586 9611, Korea (South): +82-2-786 1507, Mexico: +52 14 220 060, Netherlands: +31-294-418 585, Norway: +47-67-17 53 00, Portugal: +351-21-711 0720, Russia: +7 095 209 2836, South Africa: +27-11-314 1234, Spain: +34-93-582 4454, Sweden: +46-8-555 788 42, Switzerland: +41-61-272 0737, Thailand: +66 2 712 7241, U.A.E.: +971-4-836 974, United Kingdom: +44-870-6061478, Venezuela: +58-2-266 43 11

www.nelesautomation.com

neles automation

A member of Metso Corporation