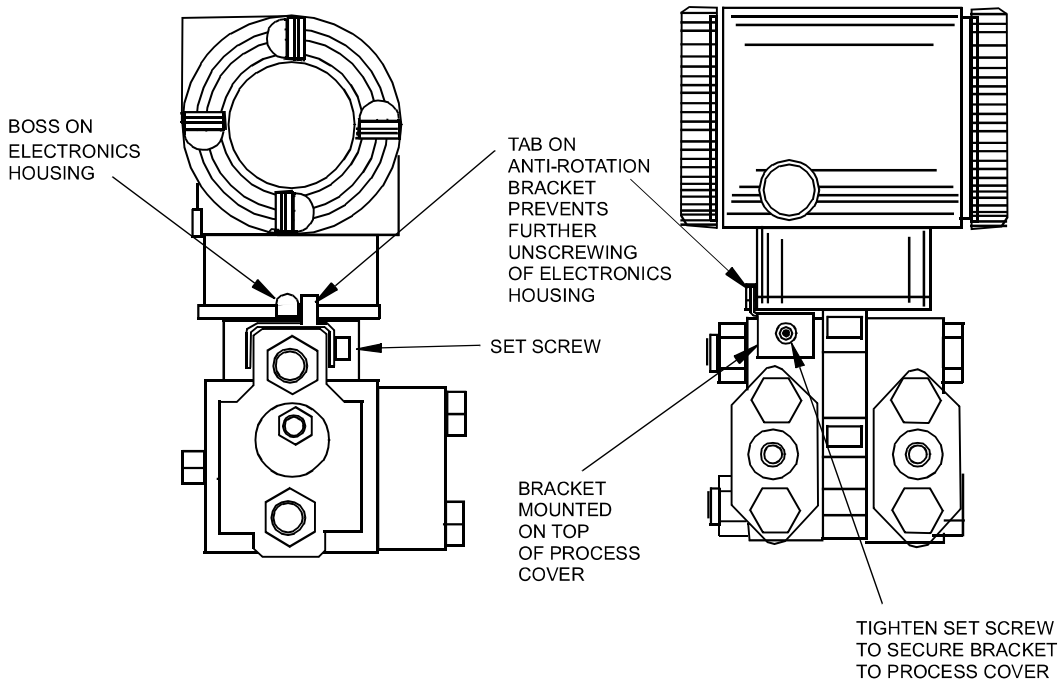

Figure 15. Installing the Anti-Rotation Bracket on the Process Cover

3. Calibration and Configuration

CAUTION: Any time Calibration (CALIB) or Configuration (CONFIG) mode is entered, the transmitter output is automatically set to 4 mA until CANCEL or SAVE is selected and the transmitter comes back online. Make sure that the control loop is in ***manual*** *before selecting CALIB or CONFIG.*

NOTES:
1. For best results in applications where high accuracy is required, rezero the transmitter output once it has stabilized at the final operating temperature.

2. Zero shifts resulting from position effects and/or static pressure effects can be eliminated by rezeroing the transmitter output.

3. When checking the zero reading of a transmitter operating in the square root mode, return the output to the linear mode. This will eliminate an apparent instability in the output signal. Return the transmitter output to the square root mode after the zero check is complete.

4. After calibrating transmitters operating with a 4 to 20 mA output signal, check the underrange and overrange output values to ensure that they extend beyond 4 and 20 mA respectively.

Calibration Setup

The following sections show setups for field or bench calibration. Use test equipment that is at least three times as accurate as the desired accuracy of the transmitter. Calibration is performed by simulating the process differential pressure. This is done by applying a pressure, equal to the differential pressure, to one side of the transmitter and then venting the other side of the transmitter.

NOTE: The IDP10-A transmitter can be reranged to a new calibrated range without application of pressure. See EGU LRV and EGU URV in Figure 23.

Field Calibration Setup

Field calibration is performed without disconnecting the process piping. In order to do this, you must have a bypass and shutoff valves between the process and the transmitter and one of the following:

Access to the process connections on the nonprocess side of the transmitter, or,
The optional vent screw in the side of the process covers.

If the transmitter is to be removed from the process for calibration, refer to the "Bench Calibration Setup" procedure.

For field calibration, an adjustable air supply and a pressure measuring device are required. For example, a dead weight tester or an adjustable clean air supply and pressure gauge can be used. The pressure source can be connected to the transmitter process connection with pipe fittings or it can be connected to the vent screw assembly using a calibration screw. The calibration screw has a Polyflo fitting and can be used for pressures up to 700 kPa (100 psi). It is available from The Foxboro Company as Part Number F0101ES.

NOTE: For high differential calibrations above 700 kPa (100 psi), calibration screw B0142NA can be used along with high pressure Swagelok fittings having a rating of 21 MPa (3000 psi), or more.

To set up the equipment, refer to Figure 16 and use the following procedure.

1. Open the bypass and close the shutoff valves between the process and the transmitter.
2. Release pressure from the transmitter by gradually turning the vent screw on the high-pressure side of the transmitter.

WARNING: When venting pressure from the transmitter, wear suitable protective equipment to prevent possible injury from process material, temperature, or pressure.

CAUTION: With liquid service, drain both sides of transmitter to avoid calibration errors.

3. If a calibration screw is being used, remove the vent screw and replace it with the calibration screw. Connect the pressure source to the calibration screw using 6 x 1 mm or 0.250 inch tubing.
   If a calibration screw is **not** being used, remove the entire vent screw assembly or drain plug (as applicable) from the high pressure side of the transmitter. Connect calibration tubing using a suitable thread sealant.
4. Close the bypass valve opened in Step 1.
5. Complete the setup shown in Figure 16.
6. Also connect electronic equipment as shown in Figure 17.

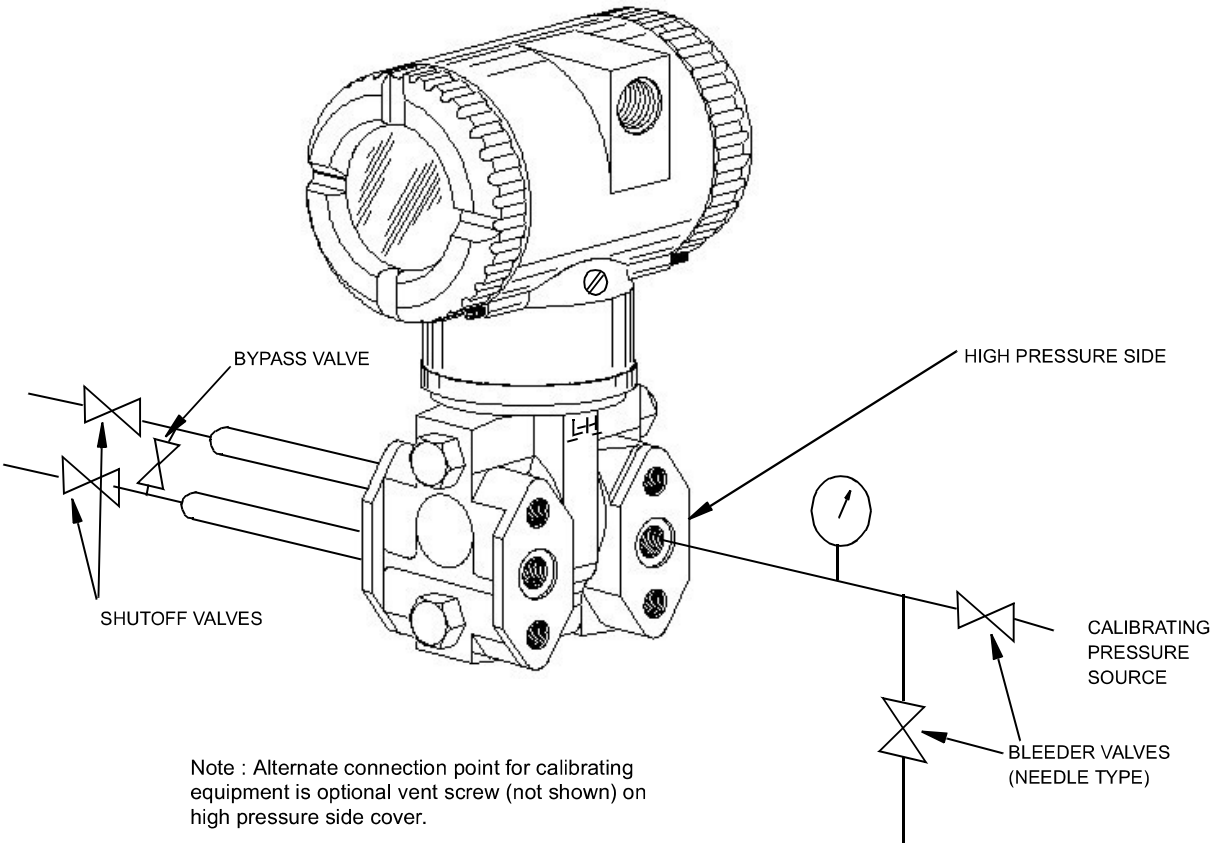

Figure 16. Field Calibration Setup

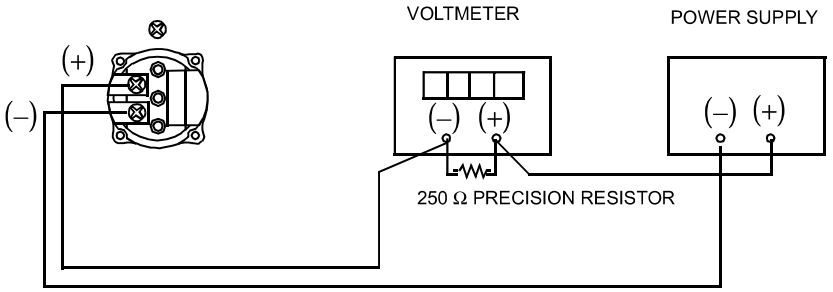

Resistor: 250 Ω, ±0.01%, 1 W minimum (Part No. E0309GY)
Power supply: Refer to Figure 10
Digital Voltmeter: readings from 1.000 to 5.000 V dc

Figure 17. Calibration Setup of Electronic Equipment

Bench Calibration Setup

The bench calibration setup requires disconnecting the process piping. For calibration setup without disconnecting the process piping, refer to the "Field Calibration Setup" procedure.

The input setup is shown in Figure 18. Connect the input piping to the high pressure side of the transmitter as shown. Vent the low pressure side of the transmitter.

Also connect electronic equipment as shown in Figure 17.

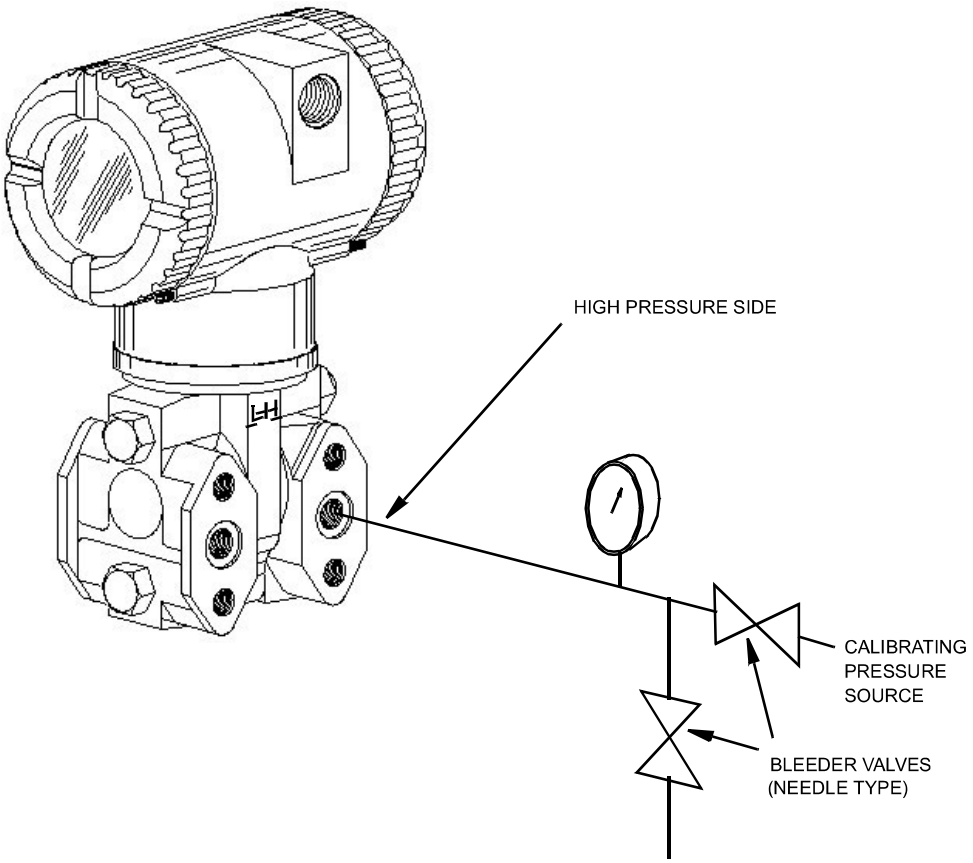

Figure 18. Bench Calibration Setup

Calibration and Configuration Using the Local Display

The local display, as shown in Figure 19, has two lines of information. The upper line is a 5-digit numeric display; the lower line is an 7-digit alphanumeric display. The display provides local indication of measurement information and a means for performing calibration and configuration, and testing the display via a 2-button (**NEXT** and **ENTER**) keypad. You can access these operations by means of a multi-level menu system. Entry to the Mode Select menu is made (from normal operating mode) by pressing the NEXT button. You can exit this menu, restore your prior calibration or configuration, and return to the normal operating mode at any time by going to CANCEL and pressing the ENTER button.

NOTE: During calibration or configuration, a single change may affect several parameters. For example, changing from linear to square root mode also changes the engineering units (EGU) to "PERCENT" by default. For this reason, if an entry is ENTERed in error, re-examine the entire data base or use the CANCEL feature to restore the transmitter to its starting configuration and begin again.

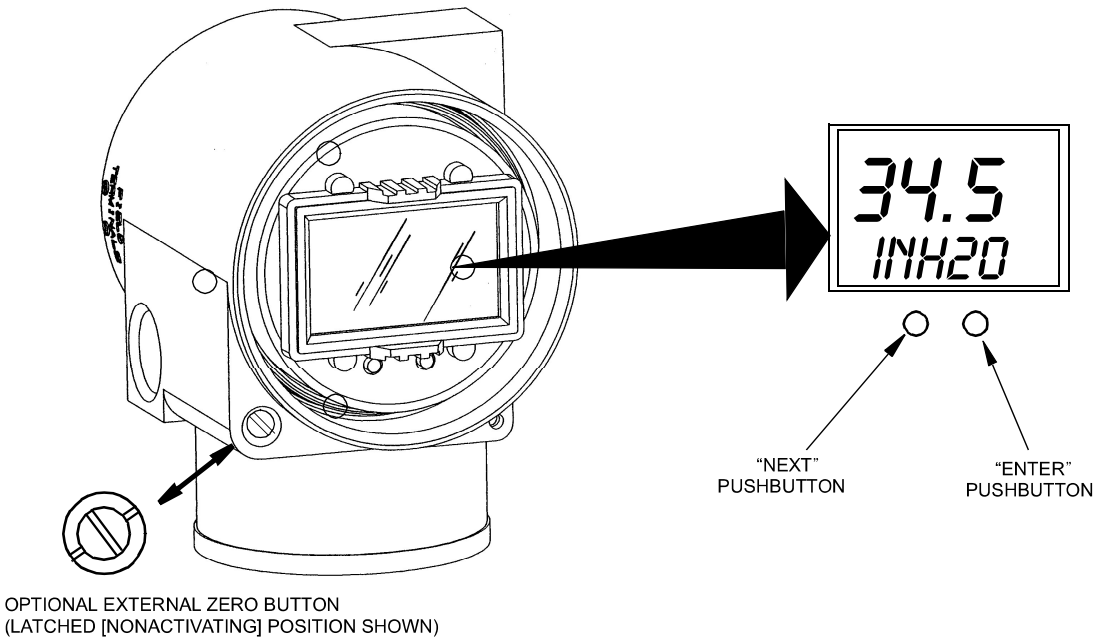

Figure 19. Local Display Module

The following items can be selected from this menu: Calibration (CALIB). Configuration (CONFIG), and Testing the display (TST DSP). The top level structure diagram is shown in Figure 20.

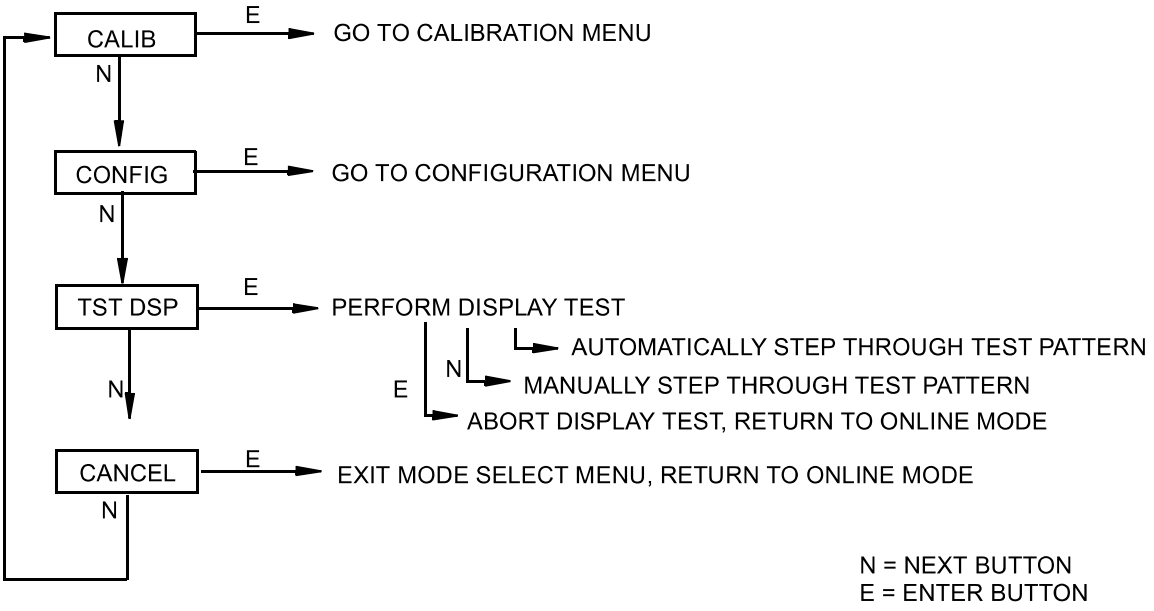

Figure 20. Top Level Structure Diagram

Calibration

To access the Calibration mode (from normal operating mode), press the NEXT button. The display will read CALIB, the first item on the menu. Acknowledge your choice of this selection by pressing the ENTER button. The display will show the first item in the Calibration menu. You can then calibrate the items shown in Table 3.

Table 3. Calibration Menu

Item	Description
CAL AT0*	Calibrate with zero pressure.
CAL LRV*	Calibrate with pressure at 0% of transmitter range (LRV)
CAL URV*	Calibrate with pressure at 100% of transmitter range (URV)
ZERO**	Set the zero (Calibrate at LRV)
SPAN**	Set the span (Calibrate at URV)
ADJ 4MA	Adjust nominal 4 mA output
ADJ20MA	Adjust nominal 20 mA output
ADJ 4MA causes the following four submenus	
A 4mA∆∆	Increase 4 mA output by large step
A 4mA∇∇	Decrease 4 mA output by large step
A 4mA∆	Increase 4 mA output by small step
A 4mA∇	Decrease 4 mA output by small step
ADJ 20MA causes the following four submenus	
A 20mA∆∆	Increase 20 mA output by large step
A 20mA∇∇	Decrease 20 mA output by large step
A 20mA∆	Increase 20 mA output by small step
A 20mA∇	Decrease 20 mA output by small step

* IDP10-A only.
**IDP10-I only.

NOTES:
1. It is not necessary to use the ADJ4MA or ADJ20MA menu selections unless there is a plant requirement to make the upper and lower calibration values exactly match readings on certain plant calibration equipment and the "zero" and "span" operations done result in a small but unacceptable difference between the transmitter mA output and the test equipment mA readout values.
2. The IDP10-A transmitter can be reranged without the application of pressure. See EGU LRV and EGU URV in Figure 23.

Proceed to calibrate your transmitter by using the NEXT key to select your item and the ENTER key to specify your selection per Figure 21 or Figure 22. At any point in the calibration you may CANCEL, restore your prior calibration and return to the online mode or SAVE your new calibration.

IDP10-A Calibration

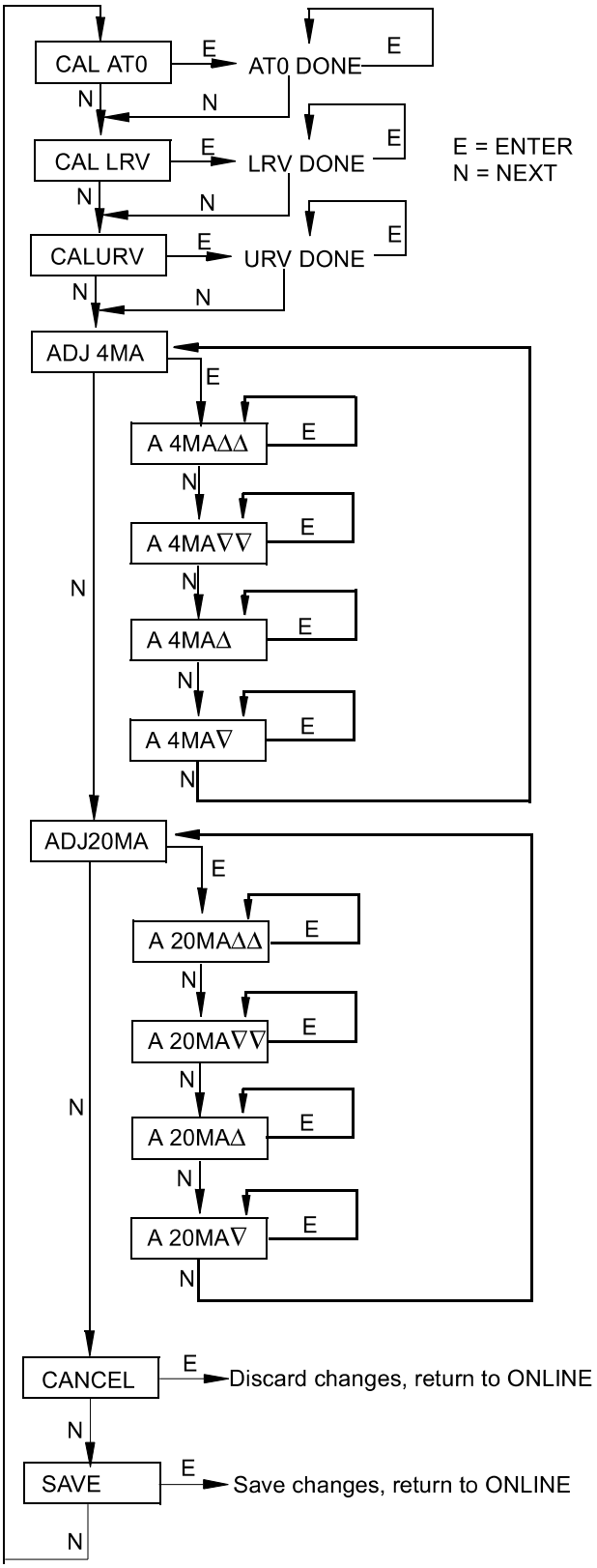

CAL AT0: To set or reset the zero point at zero pressure, apply zero pressure to the transmitter and, at display of CAL AT0, press ENTER. This can be done whether LRV is zero or not. Completion is indicated by the display AT0 DONE.

CAL LRV: To set or reset 0% of range input, apply pressure to the transmitter equal to the Lower Range Value (LRV) in the transmitter data base and, at display of CAL LRV, press ENTER. Completion is indicated by the display LRV DONE.

CAL URV: To set or reset 100% of range input, apply pressure to the transmitter equal to the Upper Range Value (URV) in the transmitter data base and, at display of CAL URV, press ENTER. Completion is indicated by the display URV DONE.

ADJ4MA: To adjust the 4 mA output, go to ADJ4MA using the NEXT button and press ENTER.

To increase the 4 mA output by a large (0.025 mA) step, press ENTER at the display A 4MAΔΔ. To decrease it by a large step, go to the display A 4MA∇∇ by pressing the NEXT button and then ENTER. To increase it by a small (0.001 mA) step, go to the display A 4MAΔ with the NEXT button and then press ENTER. To decrease it by a small step, go to the display A 4MA∇ with the NEXT button and then press ENTER.

ADJ20MA: To increase or decrease the 20 mA output by large or small steps, follow a procedure similar to that for changing the 4 mA output explained immediately above.

Figure 21. Calibration Structure Diagram

IDP10-I Calibration

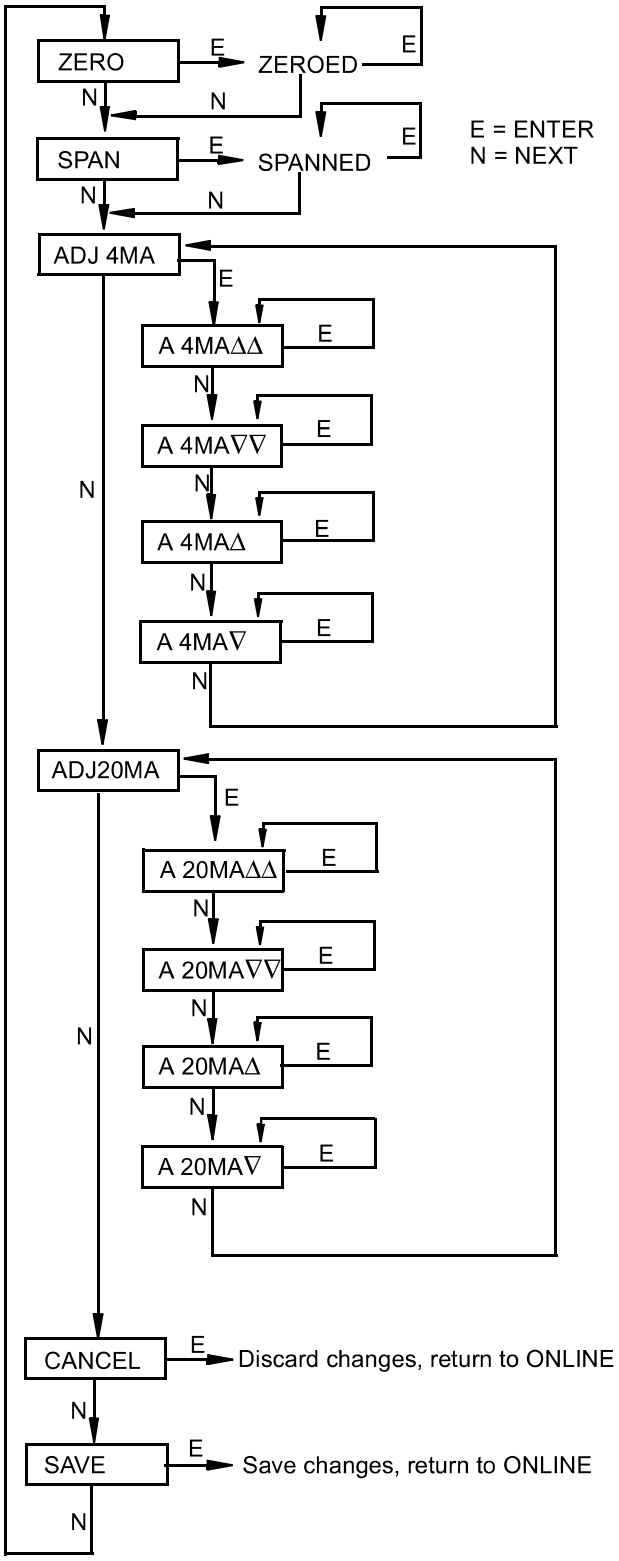

ZERO: To set or reset the 0% of range input, apply pressure to the transmitter equal to the Lower Range Value (LRV) in the transmitter data base and, at display of ZERO, press ENTER. Completion is indicated by the display ZEROED.

SPAN: To set or reset the 100% of range input, apply pressure to the transmitter equal to the Upper Range Value (URV) in the transmitter data base and, at display of SPAN, press ENTER. Completion is indicated by the display SPANNED.

ADJ4MA: To adjust the 4 mA output, go to ADJ4MA using the NEXT button and press ENTER.

To increase the 4 mA output by a large (0.025 mA) step, press ENTER at the display A 4MAΔΔ. To decrease it by a large step, go to the display A 4MA∇∇ by pressing the NEXT button and then ENTER. To increase it by a small (0.001 mA) step, go to the display A 4MAΔ with the NEXT button and then press ENTER. To decrease it by a small step, go to the display A 4MA∇ with the NEXT button and then press ENTER.

ADJ20MA: To increase or decrease the 20 mA output by large or small steps, follow a procedure similar to that for changing the 4 mA output explained immediately above.

Figure 22. Calibration Structure Diagram

Zero Adjustment Using External Zero Button

An optional external zero adjustment mechanism in the electronics housing (see Figure 19) allows local "rezeroing" of the transmitter output without having to remove the electronics compartment cover. The mechanism is magnetically activated through the housing wall to prevent moisture from entering the enclosure. Zeroing is accomplished when the external zero button is depressed. On the IDP10-A transmitter, the external zero button does a CAL AT0 calibration (at zero pressure); on the IDP10-I transmitter, it does a ZERO calibration (at the LRV). To use this feature:

1. Unlatch the external zero button by turning it 90° in a counterclockwise direction so that the screwdriver slot lines up with the two holes in the face of the adjacent part. Do *not* push the button in with the screwdriver while doing this.
2. On the IDP10-A transmitter, press the button with zero pressure applied to the transmitter.
   On the IDP10-I transmitter, press the button after applying pressure to the transmitter equal to the Lower Range Value (LRV) in the transmitter database.
3. The display will indicate "ZEROED." If EX ZERO is disabled, or the transmitter is not online, the display will read "BAD KEY."
4. If additional rezeroing is required after Steps 1 and 2 have been accomplished, wait 20 seconds and repeat Step 2.
5. Relatch the external zero button by turning it 90° in a clockwise direction to prevent accidental pressing of the button. Do *not* push the button in with the screwdriver while doing this.

Configuration

You can access the Configuration mode by the same multi-level menu system that was used to enter Calibration mode. Entry to the Mode Select menu is made (from normal operating mode) by pressing the NEXT button. The display will read CALIB, the first item on the menu. Press the NEXT button again to get to the second item on the menu, CONFIG. Acknowledge your choice of this selection by pressing the ENTER button. The display will show the first item in the Configuration menu. You can then configure items shown in Table 4 for the IDP10-A transmitter or in Table 4 for the IDP10-I transmitter. The initial factory configuration is also given in these tables.

Table 4. IDP10-A Configuration Menu

Item	Description	Initial Factory Configuration[1]
EX ZERO	External zero; enable or disable	Enable
OUT DIR	Output direction; forward or reverse	Forward
OUTMODE	Output; linear or type of square root	Linear
OUTFAIL	Fail mode output; low or high	High
DAMPING	Damping; none, 2-, 4-, or 8-seconds	None
EGU SEL	Engineering units for calibrated range and display: Select from list if linear mode. Choose Percent or enter custom units if square root mode.	Per Sales Order for Linear; Percent for Sq Rt
EGU LRV[2]	Set Lower Range Value (LRV)	Per Sales Order
EGU URV[2]	Set Upper Range Value (URV)	Per Sales Order
DSP URV[3]	User defined Upper Range Value for display	Per Sales Order

[1]Default settings. If optional feature "–C2" is specified, the initial factory configuration is custom per order.
[2]This parameter is only shown when OUTMODE is LINEAR.
[3]This parameter is only shown when OUTMODE is one of the square root selections.

Table 5. IDP10-I Configuration Menu

Item	Description	Initial Factory Configuration[1]
EX ZERO	External zero; enable or disable	Enable
OUT DIR	Output direction; forward or reverse	Forward
OUTMODE	Output; linear or type of square root	Linear
OUTFAIL	Fail mode output; low or high	High
DAMPING	Damping; none, 2-, 4-, or 8-seconds	None
EGUDISP	User defined engineering units for display; enable or disable	Disable[2]
EGUDISP **enable** causes the following submenus		
LABEL	User defined label for display	PERCENT
EGU FMT	Decimal places; none, 1, 2, or 3	000.0
EGU LRV	User defined Lower Range Value for display	0.0
EGU URV	User defined Upper Range Value for display	100.0

[1]Default settings. If optional feature "–C2" is specified, the initial factory configuration is per sales order.
[2]Specifying Disable makes the display automatically default to 0.0 to 100.0 percent.

Proceed to configure your transmitter by using the NEXT key to select your item and the ENTER key to specify your selection per Figure 23 (IDP10-A) and Figure 24 (IDP10-I). At any point in the configuration you may CANCEL your changes and return to the online mode or SAVE your changes.

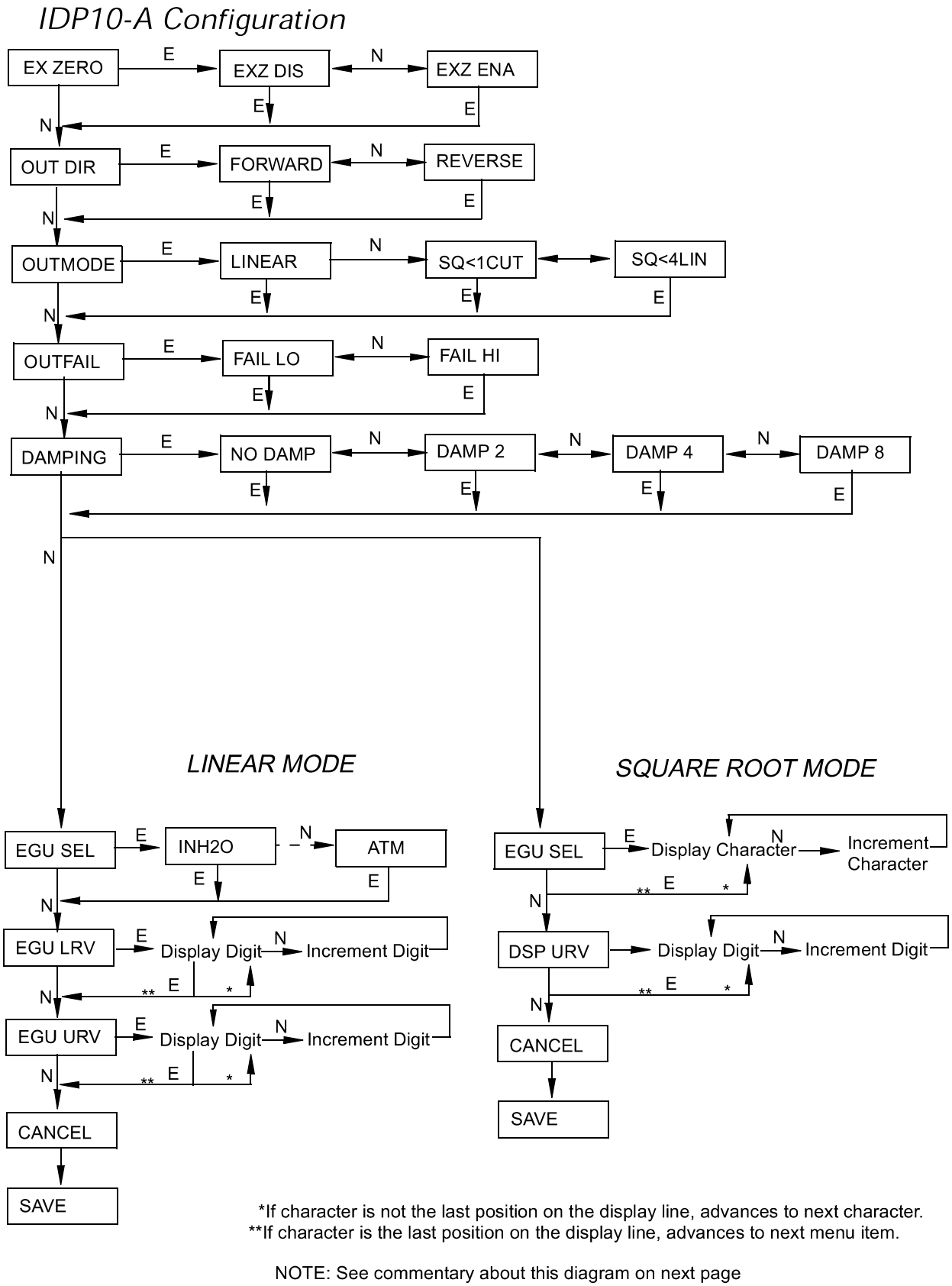

Figure 23. Configuration Structure Diagram

Commentary on Figure 23

In general, use the NEXT button to select an item and ENTER button to specify a selection.

EX ZERO: The External Zero feature allows the optional external zero pushbutton to be disabled for additional security. To configure this feature, go to EX ZERO with the NEXT button and press ENTER. Use the NEXT button to select EXZ DIS or EXZ ENA and press ENTER.

OUT DIR: To configure the Output Direction, go to OUT DIR with the NEXT button and press ENTER. Use the NEXT button to select FORWARD (4 - 20 mA) or REVERSE (20 - 4 mA) and press ENTER.

OUTMODE: To configure the mode of the output, go to OUTMODE with the NEXT button and press ENTER. Use the NEXT button to select LINEAR, SQ<1CUT (square root with cutoff below 1% of calibrated pressure range), or SQ<4LIN (square root with dual slope linear below 4% of calibrated pressure range) and press ENTER.

NOTE: If you wish the output and display to be in square root, it is necessary to first configure OUTMODE as LINEAR and follow the LINEAR MODE path in Figure 23 to establish the pressure LRV and URV. Then go back and configure OUTMODE as one of the square root mode selections and follow the SQUARE ROOT MODE path.

OUTFAIL: The Outfail feature provides high or low output with certain malfunctions. To configure the fail mode output, go to OUTFAIL with the NEXT button and press ENTER. Use the NEXT button to select FAIL LO or FAIL HI and press ENTER.

DAMPING: To configure additional damping, go to DAMPING with the NEXT button and press ENTER. Use the NEXT button to select NO DAMP, DAMP 2, DAMP 4, or DAMP 8 and press ENTER.

EGU SEL: To configure engineering units for your calibrated range and display, go to EGU SEL with the NEXT button and press ENTER. Depending on how OUTMODE is configured, the remainder of the configuration takes one of two paths.

If OUTMODE was configured as LINEAR, use the NEXT button to select one of the following units: INH2O, INHG, FTH2O, MMH2O, MMHG, PSI, BAR, MBAR, G/CM2, KG/CM2, PA, KPA, MPA, TORR, or ATM and press ENTER. The display advances to EGU LRV.

If OUTMODE was configured as SQ<1CUT or SQ<4LIN, you can specify any custom display unit up to seven characters in length. The display will show PERCENT with the first character flashing. Use the NEXT button to step through the library of characters (see Table 6) to select the desired first character, then press ENTER. Your selection will be entered and the second character will flash. Repeat this procedure until you have created your new unit name. If the unit name has less than seven characters, use blanks for the remaining spaces. When you have configured the seventh space, the display advances to DSP URV.

EGU LRV: To configure the LRV, press ENTER at the prompt EGU LRV. Use the NEXT button to toggle between a space or a minus and press ENTER. Then use the NEXT button to step through the library of numerical characters to select the desired first digit, and press

ENTER. Your selection will be entered and the second digit will flash. Repeat this procedure until you have entered your last digit. Then use the next button to move the decimal point to its desired location and press ENTER.

EGU URV: Similar to EGU LRV immediately above.

DSP URV: To configure the display URV in the units specified, press ENTER at the prompt DSP URV. Use the NEXT button to toggle between a space or a minus and press ENTER. Then use the NEXT button to step through the library of numerical characters to select the desired first digit, and press ENTER. Your selection will be entered and the second digit will flash. Repeat this procedure until you have entered your last digit. Then use the next button to move the decimal point to its desired location and press ENTER.

Reranging an IDP10-A Transmitter

The IDP10-A Transmitter can be reranged without application of pressure. To do this in Linear mode, just reconfigure EGU LRV and EGU URV. To rerange the transmitter being used in Square Root mode, perform the following procedure:

1. In Configuration, set OUTMODE to LINEAR. This is a temporary state.
2. Then configure EGU LRV and EGU URV, first changing the units in EGU SEL if necessary.
3. Save this configuration.
4. Set OUTMODE back to your choice of square root mode.
5. Change EGU SEL and DSP URV if required.
6. Save this configuration.

NOTE: When OUTMODE is set in square root mode, the last saved pressure range set by entering EGU LRV and EGU URV in linear mode is always maintained.

IDP10-I Configuration

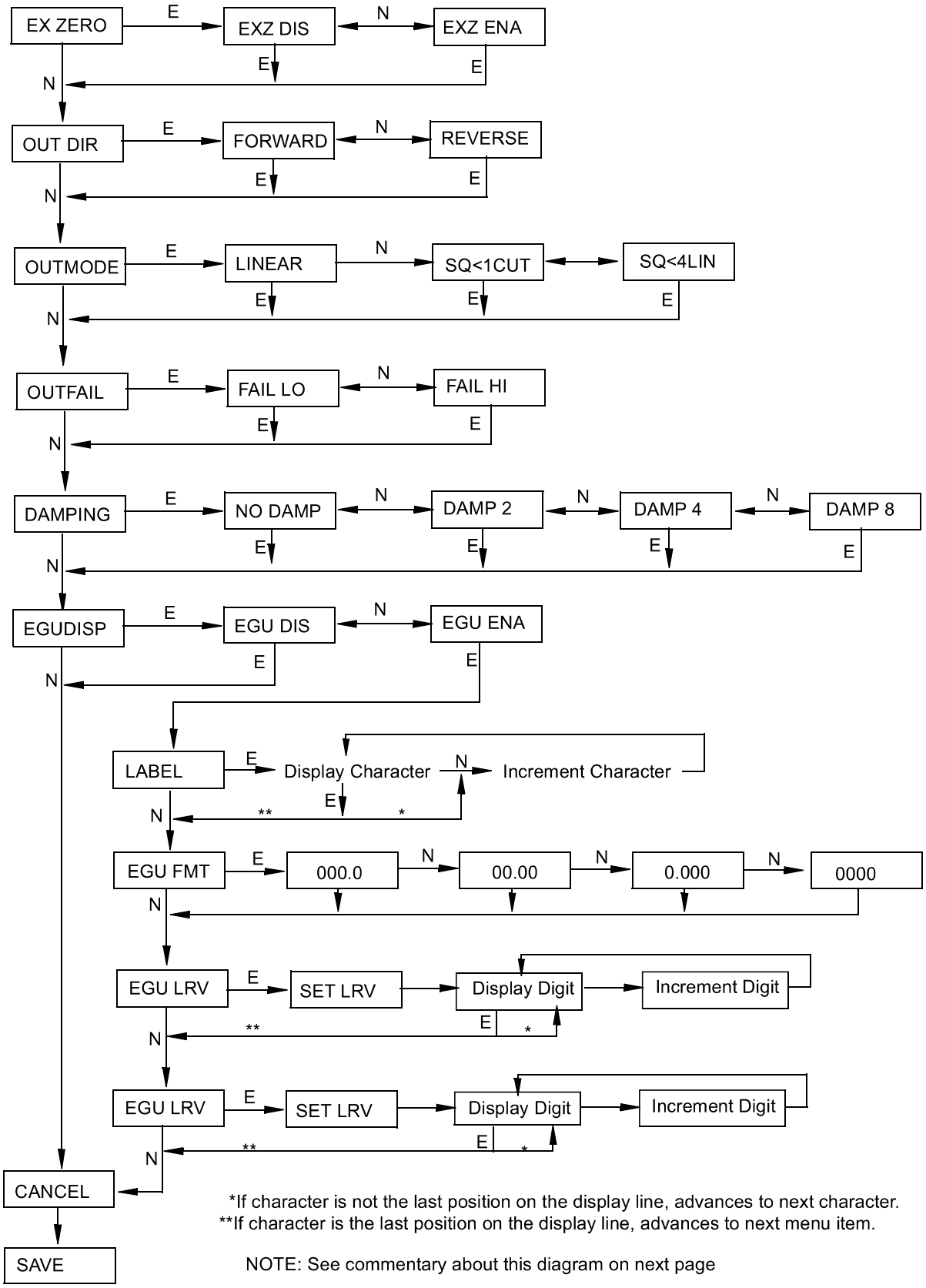

Figure 24. Configuration Structure Diagram

Commentary on Figure 24

In general, use the NEXT button to select your item and the ENTER button to specify your selection.

EX ZERO: The External Zero feature allows the optional external zero pushbutton to be disabled for additional security. To configure this feature, go to EX ZERO with the NEXT button and press ENTER. Use the NEXT button to select EXZ DIS or EXZ ENA and press ENTER.

OUT DIR: To configure the Output Direction, go to OUT DIR with the NEXT button and press ENTER. Use the NEXT button to select FORWARD (4 - 20 mA) or REVERSE (20 - 4 mA) and press ENTER.

OUTMODE: To configure the mode of the output, go to OUTMODE with the NEXT button and press ENTER. Use the NEXT button to select LINEAR, SQ<1CUT (square root with cutoff below 1% of calibrated pressure range), or SQ<4LIN (square root with dual slope linear below 4% of calibrated pressure range) and press ENTER.

OUTFAIL: The Outfail feature provides high or low output with certain malfunctions. To configure the fail mode output, go to OUTFAIL with the NEXT button and press ENTER. Use the NEXT button to select FAIL LO or FAIL HI and press ENTER.

DAMPING: To configure additional damping, go to DAMPING with the NEXT button and press ENTER. Use the NEXT button to select NO DAMP, DAMP 2, DAMP 4, or DAMP 8 and press ENTER.

EGUDISP: To configure percent or custom engineering units for your display, go to EGUDISP with the NEXT button and press ENTER. Use the NEXT button to select EGU DIS or EGU ENA and press ENTER. If you selected EGU DIS, your display will read 0 to 100.0 percent. If you selected EGU ENA, you can enter an engineering unit (LABEL), decimal point placement (EGU FMT), lower range value for display (EGU LRV), and upper range value for display (EGU URV) in the following four submenus.

LABEL: To configure engineering units, press ENTER at the prompt LABEL. The display will show the last (or default) label with the first character flashing. Use the NEXT button to step through the library of characters (see Table 6) to select the desired first character, then press ENTER. Your selection will be entered and the second character will flash. Repeat this procedure until you have created your new label. If the label has less than seven characters, use blanks for the remaining spaces. When you have configured the seventh space, the display will advance to the next menu item.

EGU FMT: To configure decimal point placement, press ENTER at the prompt EGU FMT. Use the NEXT button to select 000.0, 00.00, 0.000, or 0000 and press ENTER.

EGU LRV: To configure the LRV, press ENTER at the prompt EGU LRV. Use the NEXT button to step through the library of numerical characters to select the desired first digit, then press ENTER. Your selection will be entered and the second digit will flash. Repeat this pro-

cedure until you have created your new LRV. The first place is reserved for a space or a minus sign. Therefore, there can never be more than four numerical characters entered.

NOTE: To enter a minus sign on transmitters with a firmware revision level prior to 1.02, you must first enter a nonzero range value and save it. Then, set the minus sign. These transmitters will not accept a minus sign when the range value is zero.

EGU URV: Similar to EGU LRV immediately above.

IDP10-A and IDP10-I Character Lists

.

Table 6. Alphanumeric Character List

Characters
space (shown as ⊠)
*
+
–
/
0 through 9
<
>
A through Z (upper case)
[
\
]
Δ
- (underscore)
∇

Table 7. Numeric Character List

Characters
–
0 through 9

Testing the Display

You can access the Test Display mode by the same multi-level menu system that was used to enter Calibration, and Configuration mode. Entry to the Mode Select menu is made (from normal operating mode) by pressing the NEXT button. The display will read CALIB, the first item on the menu. Press the NEXT button two times to get to the third item on the menu, TST DSP. Acknowledge your choice of this selection by pressing the ENTER button. The display will show the first test segment pattern. You can step through the five patterns by repeated use of the NEXT button. You may abort the test at any time by pressing the ENTER button. If neither button is pressed, the display will automatically step through the five patterns in the order shown, pausing for about five seconds at each pattern and then return to the Online mode. The five patterns are shown in Figure 25. The five patterns are shown in Figure 25.

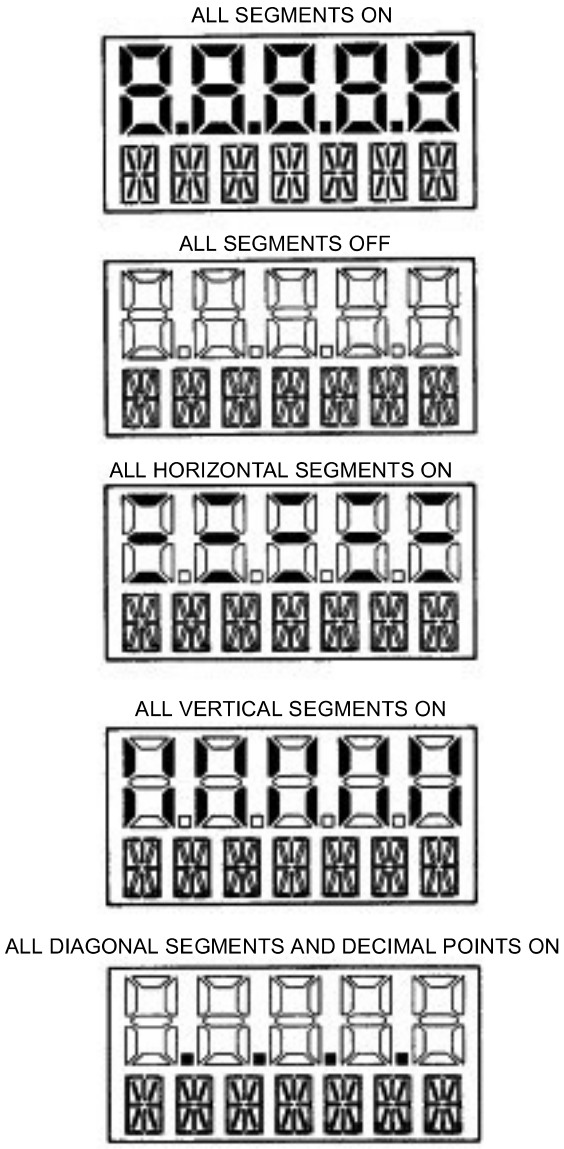

Figure 25. Display Test Segment Patterns

Error Messages

Table 8. Error Messages

Message	Interpretation
OVR RNG	Normalized calculation result greater than 2% above calibrated SPAN. a. Overrange input; correct input condition. b. Bad SPAN calibration; recalibrate SPAN. c. Bad sensor connection; check electronics module to sensor connection. d. Defective or damaged sensor; replace sensor.
UND RNG	Normalized calculation result greater than 2% below calibrated ZERO. a. Underrange input; correct input condition. b. Bad ZERO calibration; recalibrate SPAN. c. Bad sensor connection; check electronics module to sensor connection. d. Defective or damaged sensor; Replace sensor.
FDB ERR	CRC error detected in Factory Database on startup. a. Incorrect user database; replace sensor. b. Bad sensor connection; check electronics module to sensor. c. Defective or damaged sensor; replace sensor.
UDB ERR	CRC error detected in User Database on startup. a. Incorrect user database; reconfigure/recalibrate transmitter. b. Bad sensor connection; check electronics module to sensor. c. Defective or damaged sensor; replace sensor.
BAD IN1	Normalized raw pressure input outside of limits. a. Extreme overrange or underrange input; Correct input condition. b. Bad calibration; recalibrate transmitter. c. Bad sensor connection; check electronics module to sensor. d. Defective or damaged sensor; replace sensor.
BAD IN3	Normalized raw temperature input outside of limits. a. Bad sensor connection; check electronics module to sensor. b. Defective or damaged sensor; replace sensor.
BAD KEY	Invalid keypress detected a. Pressing External Zero button with EX ZERO disabled or transmitter not Online. b. Pressing ENTER when transmitter is Online. c. Pressing NEXT or ENTER while WAIT is displayed; try again after WAIT message has cleared.
LOLIMIT	4 mA or 20 mA calibration adjustment has reached lower limit. a. Improper calibration setup; correct setup. b. Bad D/A converter; replace electronics module.
HILIMIT	4 mA or 20 mA calibration adjustment has reached upper limit. a. Improper calibration setup; Correct setup. b. Bad D/A converter; Replace electronics module.

Table 8. Error Messages (Continued)

Message	Interpretation
BADZERO*	Recalculation of offset during ZERO, CAL LRV, or EXTERNAL ZERO resulted in out of range value a. Applied pressure too high during operation. b. Improper calibration setup.
BADSPAN*	Recalculation of slope during CAL URV operation resulted in out of range value a. Applied pressure too low during CAL URV operation. b. Improper calibration setup.
BAD LRV*	Entered value for EGU LRV is outside sensor limits.
BAD URV*	Entered value for EGU URV is outside sensor limits.
BAD RNG*	Recalculation of turndown during EGU LRV or EGU URV resulted in out of range value. Entered values for EGU LRV and/or EGU URV were either too close together or too far apart.
RNG>EGU*	Recalculation of display value for EGU LRV or EGU URV resulted in out of range value. Selection of (linear) EGU units caused display to overflow.
LRVNOT0*	Attempting mode change from LINEAR to SQ<1CUT or SQ<4LIN when EGU LRV is not 0.0.

* IDP10-A only.

4. Maintenance

DANGER: For nonintrinsically safe installations, to prevent a potential explosion in a Division 1 hazardous area, deenergize transmitters before you remove threaded housing covers. Failure to comply with this warning could result in an explosion causing severe injury or death.

Parts Replacement

Parts replacement is generally limited to the electronics module assembly, housing assembly, sensor assembly, terminal block assembly, and cover O-rings. For part numbers relating to the transmitter and its options, see PL 009-005.

Replacing the Electronics Module

To replace the electronics module assembly, proceed as follows:

1. Turn off transmitter power source.
2. Screw in cover lock (if present) and remove the threaded electronics compartment cover by rotating it counterclockwise.
3. Remove the electronics module from the housing by loosening the two captive screws that secure it to the housing. These screws are located towards the sides of the housing. Then pull the module out of the housing.

CAUTION: The electronics module is "one assembly" at this point and is electrically and mechanically connected to topworks with a flexible ribbon signal cable, a 2-wire power cable, and in some cases, a cable for an optional external zero pushbutton. Do NOT exceed the slack available in these cables when removing the assembled module.

4. Unplug all cable connectors from the rear of the electronics module, noting the location of each cable, and place the module on a clean surface.
5. Predetermine connector orientation, then insert the cable connectors into the replacement module. Replace the module in the housing and tighten the two screws that secure it to the housing.

NOTE: To rotate display, see "Positioning Display" on page 14.

6. Reinstall the cover onto the housing by rotating it clockwise until the O-ring contacts the housing; then continue to hand tighten as much as possible (at least 1/4 turn). If cover locks are present, align the serration in the cover with the lock and unscrew it until it extends into the cover serration to prevent unwanted cover rotation.

7. Turn on transmitter power source.

The module replacement procedure is now complete.

NOTE: The transmitter configuration is stored in the sensor assembly. Therefore, the configuration settings are retained when replacing the electronics module. Recalibration, however, is recommended.

Replacing the Housing Assembly

To replace the housing assembly, proceed as follows:

1. Remove the electronics module per Steps 1 through 4 in the previous procedure.
2. Remove the housing by rotating it counterclockwise (when viewed from the top) using caution to avoid damaging the ribbon cables.
3. Install the new housing by reversing Step 2.
4. Reinstall the electronics housing per Steps 5 through 7 in the previous procedure.

Replacing the Sensor Assembly

NOTE: The transmitter configuration is stored in the sensor assembly. Therefore, the configuration settings must be re-entered after replacing this assembly. Recalibration is recommended.

To replace the sensor assembly, refer to Figure 26 and proceed as follows:

1. Remove the electronics module as described above.
2. Remove the housing as described above.
3. Remove the process covers from sensor by removing two hex head bolts.
4. Replace gaskets in process covers using new gaskets.
5. Install process covers and housing on new sensor. Torque cover bolts in several even increments to 100 N·m (75 lb·ft) [66 N·m (50 lb·ft) for bolt options B1 and D5].
6. Reinstall electronics module.
7. Pressure test the sensor and process cover assembly by applying a hydrostatic pressure of 150% of the maximum static and overrange pressure rating (see page 3) to both sides of the process cover/sensor assembly simultaneously through the process connections. Hold pressure for one minute. There should be no leakage of the test fluid through the gaskets. If leakage occurs, retighten the cover bolts per Step 5 or replace the gaskets.

CAUTION: Perform hydrostatic test with a liquid and follow proper hydrostatic test procedures.

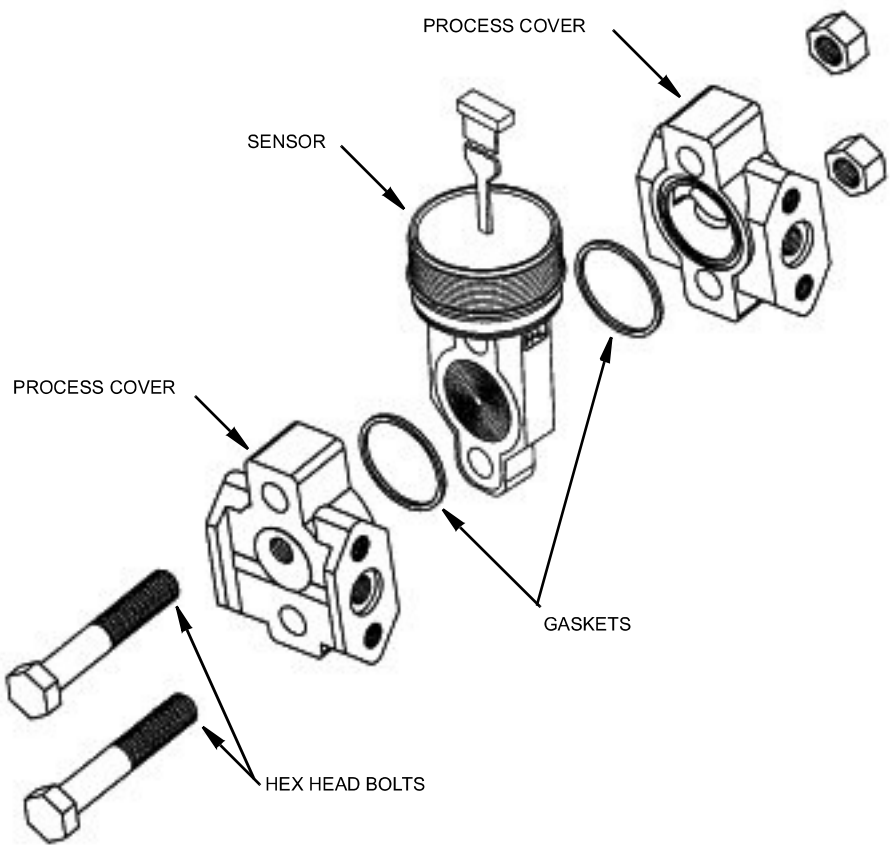

Figure 26. Replacing the Sensor Assembly

Replacing the Terminal Block Assembly

1. Turn off transmitter power source.
2. Screw in cover lock (if present) and remove the Field Terminals compartment cover by rotating it counterclockwise.
3. Remove the four socket head screws securing the terminal block.
4. Disconnect the loop wiring connector from the terminal block.
5. Remove the terminal block and the gasket under it.
6. Install new gasket.
7. Reconnect the loop wiring connector.
8. Install the new terminal block and resinstall the four screws to 0.56 N·m (5 in·lb) in several even increments.
9. Reinstall the cover onto the housing by rotating it clockwise until the O-ring contacts the housing; then continue to hand tighten as much as possible (at least 1/4 turn). If cover locks are present, align the serration in the cover with the lock and unscrew it until it extends into the cover serration to prevent unwanted cover rotation.
10. Turn on transmitter power source.

Index

ISSUE DATES
FEB 1996
JUL 1997
DEC 1997
MAR 1998

Vertical lines to right of text or illustrations indicate areas changed at last issue date.

The Foxboro Company
33 Commercial Street
Foxboro, MA 02035-2099
United States of America
http://www.foxboro.com
Inside U.S.: 1-888-FOXBORO
(1-888-369-2676)
Outside U.S.: Contact your
local Foxboro Representative.
Facsimile: (508) 549-4992

A Siebe Group Company MB 100 Printed in U.S.A. 0398